ITEM NO.	QTY.	PART NUMBER
1	1	DELRIN BUSHING-1
2	2	DELRIN BUSHING-2
3	1	DELRIN BUSHING-3
4	1	DELRIN BUSHING-4
5	2	DELRIN BUSHING-5
6	3	DELRIN BUSHING-6

NOTE:
1. ALL ID TOLERANCES ARE +0.001/ +0.005.
   PREFERRABLY A SNUG SLIP FIT
   AROUND PART "TORQUE SHAFT".
2. ALL HEIGHT TOLERANCES ARE -0.002/ -0.006.
3. .196 FEATURE IS LIGHT PRESS FIT INSIDE .196 HOLE IN
   A. BEAM, TOP
   B. BEAM, BOTTOM.

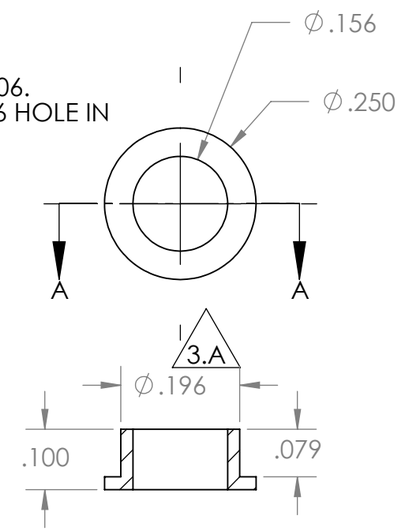

SECTION A-A
SCALE 4 : 1

-1

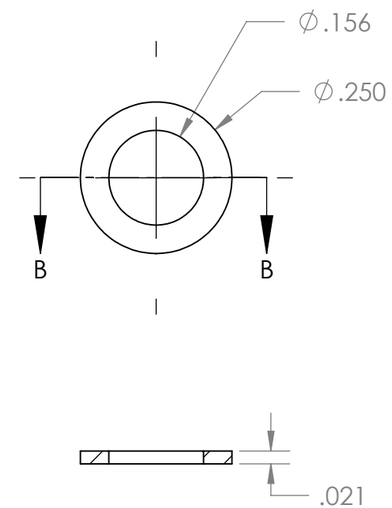

SECTION B-B
SCALE 4 : 1

-2

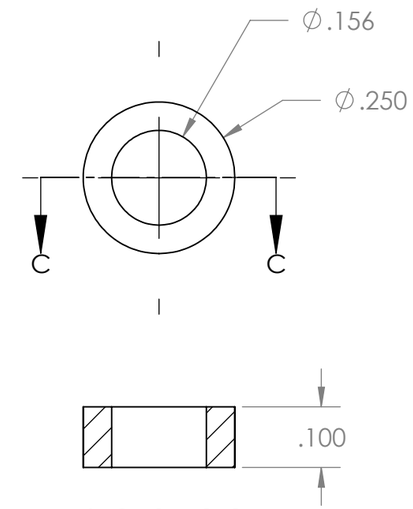

SECTION C-C
SCALE 4 : 1

-3

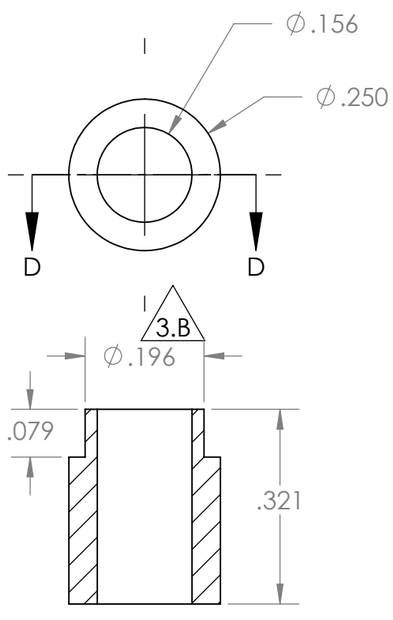

SECTION D-D
SCALE 4 : 1

-4

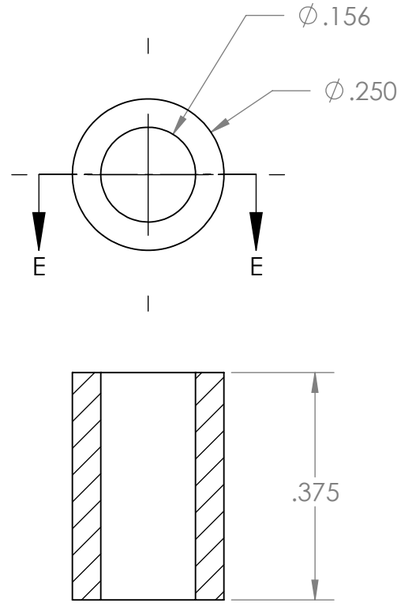

SECTION E-E
SCALE 4 : 1

-5

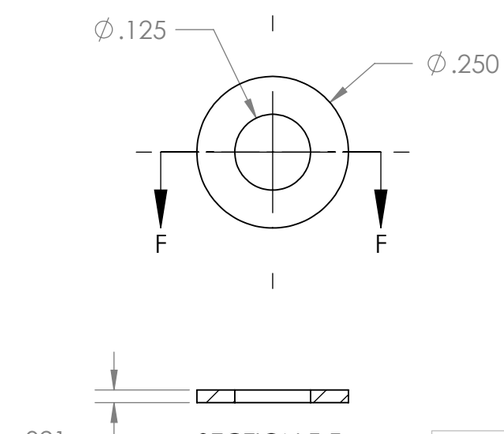

SECTION F-F
SCALE 4 : 1

-6

PROPRIETARY AND CONFIDENTIAL

THE INFORMATION CONTAINED IN THIS DRAWING IS THE SOLE PROPERTY OF John Brown.

UNLESS OTHERWISE SPECIFIED:		NAME	DATE
DIMENSIONS ARE IN INCHES DIMENSIONS APPLY AFTER SURFACE TREATMENT TOLERANCES: ANGULAR: MACH ± .5 TWO PLACE DECIMAL ± .01 THREE PLACE DECIMAL ± .005 BREAK SHARP EDGES .005-.010	DRAWN	John Brown	9/10/2010
	CHECKED	John Brown	12/15/2010
	ENG APPR.		
	MFG APPR.		
	Q.A.		
INTERPRET GEOMETRIC TOLERANCING PER:	COMMENTS:		
MATERIAL DELRIN	SEE NOTES		
FINISH			

ITAR CONTROLLED DOCUMENT

TITLE:

DELRIN BUSHINGS

SIZE	DWG. NO.	REV
B	DELRIN BUSHING-x	A

SCALE: 16:1 | WEIGHT: | SHEET 1 OF 1