FINAL DESIGN REPORT
Swanton Pacific Railroad – Track Maintainer Upgrades
Track Brush & Blow

ME 430-08
Spring 2017

06/02/17

Jakob Graf

Dustin Platt

Professor Eileen Rossman, Advisor

Mechanical Engineering Department
California Polytechnic State University
San Luis Obispo
2016-17

Statement of Disclaimer

Since this project is a result of a class assignment, it has been graded and accepted as fulfillment of the course requirements. Acceptance does not imply technical accuracy or reliability. Any use of information in this report is done at the risk of the user. These risks may include catastrophic failure of the device or infringement of patent or copyright laws. California Polytechnic State University at San Luis Obispo and its staff cannot be held liable for any use or misuse of the project.

TABLE OF CONTENTS

I. Introduction.....1

II. Background Information.....1

A. Problem Definition

B. Similar Products

C. Challenges

III. Objectives.....8

A. Customer Requirements

B. Engineering Specifications

C. Quality Function Deployment

D. Project Scope

E. Risks

IV. Design Development.....15

A. Concept Generation

B. Pugh Matrices

i. Concept 1

ii. Concept 2

iii. Concepts 3 & 4

iv. Concept 5

C. Controlled Convergence

D. Top Concept

E. Quantitative Validation

F. Nozzle Design Validation

G. Preliminary Test and Construction Plans

H. Safety Hazard Identification

V. Detailed Design……...…27

A. Design Overview

B. Nozzle

C. Mounted Shelf Interface Assembly

i. Shelf Interface Assembly

a. Shelf Interface
b. Locator Plate
ii. Mounting Strip
D. Blower Base Assembly
i. Aluminum (Al) Safety Block
ii. Base Assembly
a. Base Plate
b. Side Wall
c. Tie-Down Wall
E. Ducting Assemblies
i. Construction
a. Spiral Ducting
ii. Safety
iii. Calculations
F. Maintenance
G. Cost Estimate
H. Design Validation Plan
i. Operating Time
ii. Number of Passes
iii. Installation
iv. Ideal Blowing Power
v. Actuation Force
vi. Nozzle Track Clearance

VI. Manufacturing……47
A. Blower Base Assembly
B. Shelf Interface Assembly
C. Ducting Assemblies

VII. Testing……51
A. Operating Time
B. Number of Passes
C. Installation
D. Ideal Blowing Power
E. Actuation Force
F. Nozzle Track Clearance

VIII. Design Changes and Final Product……...……60

A. Ratchet Strap

B. Rear Ducting Assembly

C. Blower Base Assembly

D. Shelf Interface Assembly

E. Safety Block

F. Front Ducting Clamp

G. Leaf Blower Attachment Interface

H. Final Product

IX. Management Plan.....64

X. References.....66

XI. Appendices.....67

TABLES

Table No.	Section	Description
1	II	Leaf Blower Technical Data
2	III	Engineering Specifications

FIGURES

Figure No.	Section	Description
1	II	Track Maintainer
2	II	Blower System
3	II	Track Map
4	II	Rail Spacing
5	II	Leaf Blowers
6	II	Loram Ballast Cleaner
7	III	Boundary Sketch
8	IV	Leaf Blower Mounting Ideation
9	IV	Concept 1 Sketch
10	IV	Concept 2 Sketch
11	IV	Leaf Blower Concept Render
12	IV	System Render
13	IV	Continuity Sketch
14	IV	Nozzle Designs
15	IV	Constructed Test Apparatus
16	IV	Flow Visualization
17	IV	Redesigned Branch Nozzle
18	V	Mounted Shelf Interface Assembly
19	V	Shelf Interface Assembly
20	V	Shelf Interface
21	V	Locator Plate
22	V	Mounting Strip
23	V	Vertical Pipe Mount
24	V	Blower Base Assembly
25	V	Al Safety Block
26	V	Base Assembly
27	V	Base Plate
28	V	Side Wall
29	V	Tie-Down Wall
30	V	Front Ducting System
31	V	Rear Ducting System
32	V	Example User Manual Maintenance Chart
33	V	Stihl BR 700 Leaf Blower
34	V	Total Assembly
35	V	Nozzle Design Options During Testing
36	V	Printed Nozzle
37	V	Swanton Washout
38	VI	Tapping Blower Base Assembly Walls

39	VI	Optical Plasma Cutter
40	VI	Milling Safety Block
41	VI	Counter boring Safety Block
42	VI	Completed Ducting Assemblies
43	VII	Track Removed Affects Full-Scale Test
44	VII	Track Section Construction
45	VII	Track Section Complete
46	VII	Before and After Qualitative Velocity Test
47	VII	Setup for Quantitative Velocity Test
48	VII	Nozzle Measurement Locations
49	VII	Left Nozzle Velocity Plot
50	VII	Right Nozzle Velocity Plot
51	VII	75% Throttle Velocity Plot
52	VII	Nozzle Schematic
53	VII	Linear Regression Fit with 95% Confidence
54	VII	Nozzle Track Clearance Test
55	VII	Shelf Measurement
56	VIII	Mounted Blower Bases
57	VIII	Final 3D-Printed Clamp

I. INTRODUCTION

Swanton Pacific Railroad is a 1/3-scale railroad in the Santa Cruz mountains, and is part of the Cal Poly owned and operated Swanton Pacific Ranch. Volunteers at the railroad need upgrades made to the blower fan system on their existing track maintainer, a railroad cart with leaf-blowing and ballast-sweeping capabilities, to address current safety and efficiency concerns. We are a senior project team of two fourth-year mechanical engineering students committed to making the relevant upgrades to the current blower system. Dr. Charlie Crabb, the director of Swanton Pacific Railroad volunteers, is the primary customer for this project. Primary contact is with him in regards to project details. The secondary customers are the volunteers at Swanton Pacific Railroad, most notably those current and future volunteers using the track maintainer.

II. BACKGROUND INFORMATION

A. Problem Definition

The proposed scope of this project was based on interviews with the relevant customers. In our first meeting with the primary customer, Dr. Crabb, we gathered important information regarding his hopes for this project and received the existing documentation for this track maintainer, the technical report for the Bio-resource and Agricultural Engineering (BRAE) project, Sweeping Fever **[1]**. This document helped us understand the history of the current track maintainer. The original cart and blower system was a custom build by Swanton Pacific Ranch volunteers. The BRAE project then added a motor-driven brush on the front of the cart, seen in Figure 1.

Figure 1: Track maintainer. In front, brush is used for leveling ballast. In back, hydraulic pump powers motors for both brush and blower system. Silver, spiral-shaped component is the fan, used for blowing leaves.

One of the more important meeting notes was the budget. Dr. Crabb said that he wanted us to keep the budget under $2500. Deviations above that amount would be acceptable but not preferred. After preliminary research into large-cost items, such as hydraulic motors and gas-powered leaf blowers, $2500 appears to be a reasonable amount of funding that will give us room to explore different ways of approaching the problems needing addressed.

Next, we narrowed the needs. In his presentation to the senior project classes earlier that month, he outlined several potential directions that this project could take. When meeting with him in person, those options were quickly narrowed. The main needs decided were as follows: a way to more evenly distribute the air blown across the track to reduce runtime of the maintenance car, a way to safely turn the nozzle of the blower, detection of track spacing to mitigate derailment concerns, and a way to more easily change the position of the rotating brush on the front of the platform. The key in these cases was that these were to be upgrades, making use of the existing hydraulic control system and pump. During the meeting, it was decided that automation should be considered "out of scope" for this project. This was because while the platform itself could theoretically be automatized, the railroad itself is still manual. Any mechanical switches in the track would still need a human operator, so autonomy was made a low priority and was ultimately dropped. Eventually, the sensor became out of scope because our team lost our third team member, a computer engineering student.

Another important issue addressed during this first meeting was the usage of the track maintainer at the ranch. There are six to eight major events during the year, before which the platform is pushed by the railroad's scale diesel engine to clean the track. The mechanisms involved are a hydraulically-driven brush and a hydraulically-driven blower fan. The debris itself is cleared with the blower fan to ensure that the oil-burning steam locomotives do not catch fire during use. The hydraulic motor and blower fan are shown below in Figure 2.

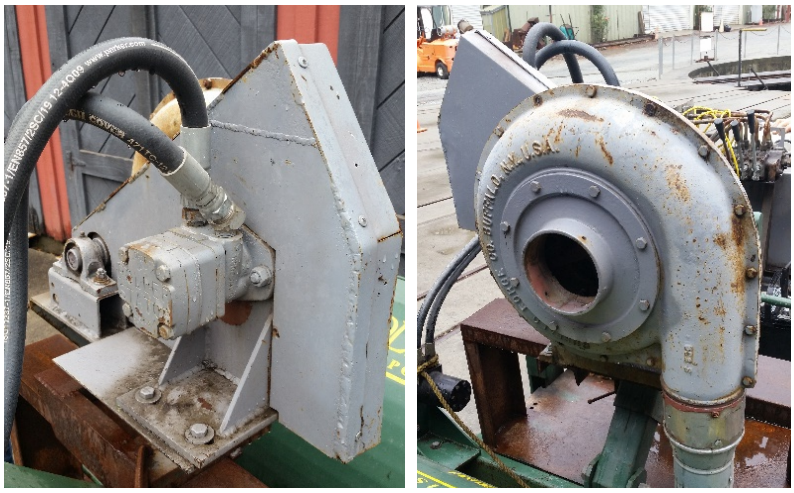

Figure 2: Blower system on track maintainer. At left, hydraulic motor drives a belt inside the triangular casing. At right, fan is driven by motor at around 1200 rpm, which is a result of a 2:1 gear ratio in the belt system.

The entire railroad is ⅓ scale and runs on 19” track. Because of the terrain in the area, there is a dense canopy along most of the track and large amounts of debris (mostly leaves) accumulate on and around the tracks below. When the track maintainer is run after long periods of inactivity, four or six full passes are required to completely clear the track of debris. A full pass is about two miles, to the end of the track and back. The start and end of the track are marked below in Figure 3.

Figure 3. Swanton Pacific Railroad track length – start marked in with a circle, end with a triangle.

Our team has been told that so long as a volunteer is there to give us access and there are no events, we are free to use the ranch and its facilities as necessary. Because of the large bulk of the track maintainer, this will be very important during the fabrication and testing. Having access to the facility, including tools and potentially lodging with enough notice, will give flexibility despite the inconvenience of three hours of driving each way.

During the first trip to the ranch, we had the chance to talk with our secondary customers, the ranch volunteers. These are the people who are directly using the track maintainer and who are most directly affected by our proposed modifications. Most of them are retired or close to retiring and, despite being in good shape for the most part, are still in danger of injury due to age. During the trip, we talked to Kyle, a younger volunteer who had most recently been using the platform. Talking with him about his experience with the platform is what prompted us to cut the rotating brush adjustment out of scope. His story about losing a jacket to the suction of the blower fan and watching him reach down to adjust the nozzle (a safety hazard due to its proximity to the wheels of the heavy platform) prompted us to focus our scope on the blower system and improving both its function and safety of use. Specifically, the blower system needs an easy way to slide from left to right along the platform, a safer way to adjust the nozzle, and an upgrade to the blower system itself to increase the airflow out of the nozzle. Talking with other volunteers also eliminated the possibility of replacing the hydraulic system with an electric system. This was because they said they do not like remembering to charge batteries (such as the car batteries other systems on the grounds make use of) and will often just throw them away. Because of this behavior, we decided to build off the existing hydraulic system.

B. Similar Products

During this trip, we were sure to document what we could about any blower fan system components and take track-related measurements. The blower fan system is a contained Navy surplus unit consisting of the hydraulic motor, a contained belt, and the blower fan driven by the belt. The motor was identified as a Roller Stator hydraulic motor but the exterior of the motor was too deteriorated to extract any other information. The track, nominally 19” spacing, was found to be 18⅞” from inner rail to inner rail and 2¼” from top of the rail to top of the tie, seen in Figure 2. Further trips to the ranch have been planned for taking current airflow data and making geometric measurements relevant to the upgrades being made.

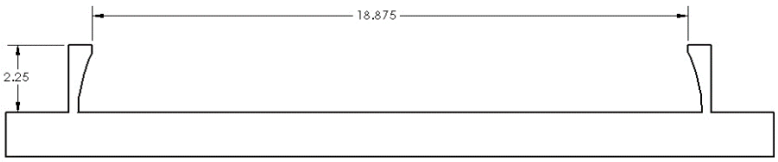

Figure 4. Track Spacing and Height. The diagram shows the rails on a representative railroad tie. Actual measurements of the tie were not made due to them being covered in ballast.

The track that our platform will be cleaning is ⅓ scale, which is uncommon. No existing commercially-available products can meet this very specific need and because of that the scope of search was widened and applied to full-scale commercial and industrial methods of clearing debris. The two methods that most closely related to our design were leaf blowers and industrial track cleaners.

Leaf blowers can be found in cordless electric, corded electric, and gas-powered styles. They have the large advantage over the existing platform of being able to clear the track in one pass (though it would take a longer amount of time). Disadvantages can be pulled from a comparison of weights and maximum air flows found below in Table 1. As seen in the table, the WORX corded electric blower weighs the least by a large margin. However once the track exits the area surrounding the station, there would be no place to plug the blower in, so that option does not perform well. The DEWALT battery-powered cordless blower weighs more than the gas-powered blower while also having a lower flow rate. The gas-powered would most likely be the best option for the ranch should they have chosen a personal leaf blower as the solution. The largest disadvantage of this choice is the weight of the backpack; fatigue would quickly become an issue for the older volunteers. Additionally, a user would likely have to fill up before finishing clearing the track, thus adding time to the overall operation. All three leaf blowers are shown below in Figure 3.

Table 1. Comparison table of leaf blower technical data **[2;3;4]**.

Brand	Power Source	Use	Product Weight [lb]	Volumetric Flow Rate [cfm]
WORX	Corded Electric	Handheld	4.4	160
DEWALT	Cordless Elect	Backpack	22.8	450
Husqvarna	Gas	Backpack	22.5	494

Figure 5. Leaf Blowers from left to right: WORX, DEWALT, Husqvarna.

The industrial cleaning option was the other end of the spectrum, as exemplified by the Loram High Performance Shoulder Ballast Cleaner. Rather than using an industrial-grade blower fan to remove debris from the ballast, the Loram Ballast Cleaner instead scoops out ballast from around and underneath the shoulders of the ties, cleans it, discharges any debris away from the track, and then redistributes the now clean ballast in the specified shape. This cleaner can clean a maximum of 2,000 tons per hour and move along the track at two miles per hour when cleaning. Physically removing the ballast allows pockets of mud or debris to be broken up and for proper drainage to be restored per Loram's information document **[5]**. A picture of Loram's device can be seen in Figure 4.

Figure 6. Loram High Performance Shoulder Ballast Cleaner

Both the leaf blowers and the Loram Ballast Cleaner serve as good benchmarks for the current track maintainer to be compared against. While the Loram product does not fit the actual track, its performance is something to be kept in mind during the design phase. The leaf blowers may be slow and hard on the operator, but they would allow for (theoretically) a single pass. Both have something to offer and be challenged with during the detailed design.

We also did a patent search for systems that blow leaves out from between railroad tracks. Patent 6,148,732 claims a railcar track cleaning system with three functions, one of which is leaf removal. Claim 5 describes a "leaf spray bar" oriented parallel to the tracks that sprays water at an outward angle of 15 degrees. However, this system is primarily intended to address the issue of wheels losing adhesion to rails, causing a braking action to be less effective **[6]**. Our system's purpose is to remove debris from between the tracks, so the patent's design is not one that we will pursue.

C. Challenges

There are some significant technical challenges and limitations that came to light as we gathered information about the project. We are limited to the current build space available on the track maintainer for making our upgrades to keep the system contained to one unit. Due to these space restraints, we need to be able to work with the existing hydraulic control system and pump. The other option, converting the blower fan to an electric-driven system, would require large batteries due to lack of trackside power sources. The use of batteries has already been ruled out as an option by our secondary customer, the Swanton Railroad volunteers, so we are left using the existing hydraulic system.

The fact that the original project was a custom-built device meant there were no available CAD documents or other technical documents. Our project will involve modifications to that original system, so all dimensioning and flow rate measurements must be made by hand. Each trip to Santa Cruz requires 6 hours of driving and as such will present a challenge if we need to know a specific detail over the course of our project.

III. OBJECTIVES

Volunteers at Swanton Pacific Railroad need upgrades made to the blower fan system on their existing track maintainer cart, to address current safety and efficiency concerns. The function of the blower system is to blow leaves out from between the tracks. Our customers include Dr. Charlie Crabb, our senior project sponsor and head of volunteers, and the volunteers at Swanton who will be using the track maintainer.

This section outlines the objectives of our design. It includes the needs of the customer, measurable quantities to measure the success of our design, a method of analysis for these customer needs and measurables, the resultant scope of the project, and the risks associated with this senior design project.

A. Customer Requirements

Our customer requirements are paramount when it comes to understanding our design constraints. We determined what our customer needed by visiting the Swanton Pacific Railroad in Santa Cruz and talking with the volunteers who have operated the track maintainer and overseen the railroad.

Safety was an issue we recognized in our face-to-face time with the operator of the track maintainer. We heard a story from the most recent operator, Kyle, who lost his jacket when the blower system was on due to the suction from the fan. This sparked a conversation about safety being an important element of our project.

Safe adjustment of the blower system's exit duct during operation is a requirement because the current platform requires reaching underneath the cart near the rails. This location is where fingers are in danger of being severed, so all solutions must avoid putting limbs in jeopardy.

The volunteers also requested an easier way to reposition the blower system in the lateral direction, best described as left to right side of the track maintainer. To laterally reposition it, a volunteer must push the heavy blower system to slide it along a steel shelf. This poses a load-bearing challenge for an older volunteer and a pinch-point safety hazard for any operator.

A related requirement is to be able to lock moving parts in place when the blower is in operation. This is relevant because currently, the blower system is held in place by a single C-clamp, which is not an ideal method of securing heavy machinery.

We also recognized that most of the volunteers at Swanton Pacific Railroad are retired, and so another requirement is for any mechanical function of our finished product to be easily handled by older volunteers. Research has been done regarding load-bearing capabilities of typical adults.

Efficiency was another recurring theme of what the customer needed. The length of track is 1 mile, and currently the track needs three passes, down and back, of the track maintainer to clear all the leaves from between the rails. Because the platform rolls along the track at about two miles per hour, a customer requirement given by our sponsor was to reduce the amount of time it takes to clean the track of debris.

A related requirement from our sponsor was to redistribute the airflow such that the track maintainer clears more debris with each pass. These requirements can be summarized as increasing the efficiency of the overall blower system. See the image below.

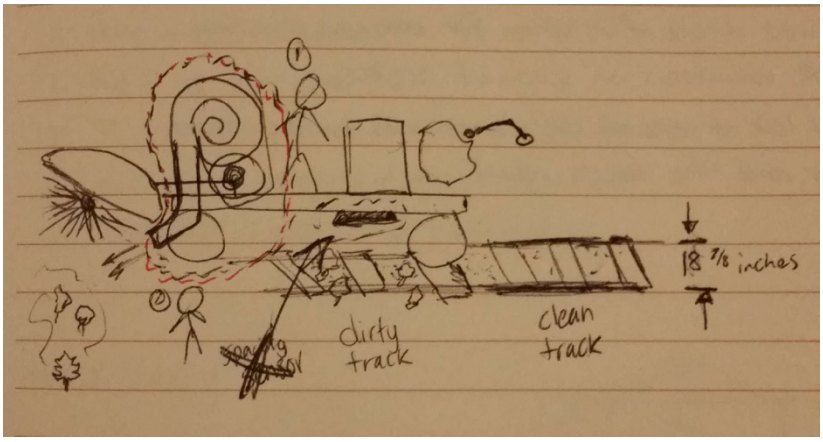

Figure 7: Boundary sketch, highlighting the scope of this project, which is limited to the blower system.

Functional constraints also have a role in determining our customer requirements. The track maintainer is currently stored outside, where weathering is a factor. Therefore, a requirement is necessary that the systems we add be weather resistant or protected. Another functional customer requirement is the airflow cannot blow ballast over the rails. If too much gravel is displaced, the structural integrity of the ballast, which supports the wooden crossties, might be compromised.

Additionally, since we were asked to upgrade the current platform rather than overhaul the entire track maintainer, a requirement is to adapt any solution to the existing control system, which hydraulically-powered. This stemmed from a conversation we had with a volunteer about the inconvenience of using battery or electrical power. All upgrades must be integrated into the current platform with no changes to major structural/operational aspects.

Finally, we were given a budget of $2500 by our sponsor, Dr. Crabb. This figure covers parts, materials, and travel expenses. Because Dr. Crabb said this number is somewhat flexible, a successful project will ideally be less than the given budget constraints.

B. Engineering Specifications

As design engineers, we have interpreted these requirements and shaped them into quantifiable and measurable engineering specifications. These are shown in Table 2 below.

Table 2. Engineering Specifications

Spec #	Specification Description	Target [units]	Tolerance	Risk H=High M=Medium L=Low	Compliance A=Analysis T=Testing I=Inspection S=Similitude
1	Safe distance between operator and moving parts or suction	1 foot	Minimum	H	T, I
2	Force to actuate mechanisms	20 pounds force	Maximum	M	A, T
3	Number of passes to clear track (1 pass = 2 miles)	2 full passes	Maximum	M	T
4	Operation time until track is clear	90 minutes	Maximum	M	T
5	Number of (added) weather susceptible components	0 components	N/A	L	I
6	Flowrate to minimize ballast movement	750 inches/second	Maximum	M	A, T, I
7	Interfaces with specific track spacing	19 inches (nominal)	Maximum	M	T, I
8	Motor hydraulic pressure	1500 psi	Maximum	H	I, S
9	Cost	$2500	Maximum	M	A

As opposed to the customer requirements, these specifications can be measured, and it will be a focus of this project to meet them. The compliance column describes the methods by which we

will measure success. Analysis means we will do a calculation to determine if the target is achieved. Testing means we will operate our complete blower system and take a measurement to determine if the specification is met. Inspection means we will visually confirm that our final product achieves the target. Similitude indicates we will compare our system to products that perform a similar function.

One factor that will be difficult to measure is the weatherability of components in our solution. However, we addressed this by requiring that there be zero components susceptible to weather. Shielding, covering, or coating are options we can take to protect the added components. Counting the number of weather-susceptible components gives us a way to numerically prove our design can endure the operating and storage conditions of Swanton Pacific Railroad.

The specifications are explained in more detail below:

1. Safe distance between operator and moving parts or suction: A body part of the operator must be a minimum of 1 foot away from any moving parts, including but not limited to fan blades, motors, or cart wheels. We are mainly concerned about hands, which are put in danger when reaching down to adjust the nozzle angle.
2. Force to actuate mechanisms: The force required to actuate a mechanism (pushing or pulling) may not exceed the maximum allowable 20 pounds of force.
3. Number of passes to clear track: The track maintainer takes up to 4 passes, down and back, of the track (8 miles total). With our solution, the track maintainer must take no more than 2 full passes to clear the track of debris.
4. Operation time until track is clear: The track maintainer must take fewer than 90 minutes to clear the track of debris.
5. Number of added weather-susceptible components: Given that the track maintainer will be stored outdoors, there must be zero components we add to the track maintainer cart which are unprotected from weathering.
6. Flowrate to minimize ballast movement: The fluid pumped out by the upgraded blower system must remove leaves from between the rails while also minimizing the volume of gravel displaced, which requires the brush to become level.
7. Interfaces with specific track spacing: The 1/3 scale track spacing, which is nominally 19 inches, must interface with our blower system solution.

8. Motor hydraulic pressure: The hydraulic pressure used by the blower system must not exceed the maximum capacity of the cart's pump, which is 1500 psi.
9. Cost: The cost of this senior project should aim not to exceed the budget goal of $2500 given by our sponsor, Dr. Crabb.

C. Quality Function Deployment

We prioritized these engineering specifications using a method known as Quality Function Deployment (QFD). The method involves developing a "House of Quality" to organize and analyze our customers, background research, benchmarking, customer requirements, and engineering specifications. The QFD can be found in **[**Appendix A]. It is important to recognize the results of our QFD because it quantifies the results of our pre-design analysis. These sections are further described and interpreted below.

The section of the table furthest right assesses how well current products and solutions address the problem posed by our customer. It shows that the existing track maintainer does a good job of fulfilling the customer requirements – better, in fact than any other current product. This is in part because the existing platform is a custom design to address the specific problem of cleaning between the rails. Its strengths are its ability to adapt to the current system, while its weaknesses are in the efficiency and safety requirements. These weaknesses are the priorities we must address in our upgrade.

While a broom or leaf blower are technically feasible solutions to the problem, they are weak in adapting to the existing platform and the requirement of reducing operation time. On the other hand, an industrial track cleaner is strong in the time and weathering requirements but weak in the cost and adaptability categories. These results are expected, but explicitly outlining them helps to recognize what competitors are doing differently to combat similar problems.

The relationships between customer requirements and engineering specifications are displayed in the middle section of the House of Quality. Possible relationships are strong, weak, or none. Apart from airflow blowing ballast over the rails and locking moving parts in place during operation, all customer requirements have a strong relationship with at least two engineering specifications. This is encouraging, because it shows that we can measure our successes relative to what the customer needs. However, it also indicates that we do not have a clear way to measure the ability of all

moving parts to lock in place. This may be a "go/no-go" type of measurement, meaning a positioning system either can or cannot lock in place.

Finally, the bottom section weighs the importance of each engineering specification to the success of our project. Based on this, the two most important are cost and the number of weather-susceptible components. However, each of the engineering specifications are weighted similarly, varying from 6% to 14% importance. According to our QFD, interfacing with the track spacing is our lowest priority engineering specification. This makes some sense given that the existing track maintainer already does a decent job satisfying this.

D. Project Scope

The scope of our senior project involves four main modifications to the existing platform for clearing the track. They include upgrading the hydraulic motor, modifying the ducting for improved leaf-blowing efficiency, modifying the lateral-positioning system, and ensuring that all new systems are safe for the operator.

We believe this scope is reasonable for us to address in our nine-month timeframe. These changes are within our expertise as fourth-year mechanical engineering students. Both members of the project team have taken Fluids Mechanics II at Cal Poly, which taught ducted fluid flow in a lab experiment, and Intermediate Design, which taught design of components in a drivetrain.

We have already taken initial steps to address modeling the flow of air pushing wet leaves and ballast. We have asked questions and received advice from Dr. Hans Mayer regarding the modeling and testing of our ducting solution paired with the hydraulic motor and lateral positioning system upgrades.

E. Risks

Additionally, we must recognize the risks associated with our project and how we can mitigate those risks to be maximize the success and safety of our team. We also must consider the risk for volunteers involved with operation of the blower system.

According to Dr. Westphal of the Cal Poly Mechanical Engineering Department, one possible risk is associated with the flow of air at speeds of up to 110 mph. This could put team members and

volunteers at risk for injury with unpredictable debris being blown into the eyes of someone operating the track maintainer. To lower the risk of eye injury, team members will be required to wear safety glasses during operation of the track maintainer, and will keep each other and nearby volunteers accountable for wearing safety glasses.

IV. DESIGN DEVELOPMENT

A. Concept Generation

The first phase of concept generation was to gather more detailed information about the track maintainer. This included taking geometric measurements of the relevant parts and systems, measuring airflow, and finding any specifications remaining on the existing blower fan system. Geometric measurements were necessary to correctly match our upgrades to the surfaces they are interacting with. We measured the size of the shelf on which the blower system rests, the space available for ducting as it goes from shelf to track height, and some additional dimensions.

We also used a pitot tube to measure the pitot-static pressure differential at each of the relevant exit locations, including fan, contraction, ducting, and bellows exits. Pressure data can be viewed in [Appendix B]. With this data, we calculated the air's velocity at each exit location. This gave us an idea of what velocity and volumetric flowrate the system can output, and a metric to compare the blower system with potentially upgraded fans and capacities of leaf blowers. We did not take measurements to quantify the amount of airflow necessary to move ballast over the edge of the track. We assumed that a much larger velocity would displace too much ballast. We plan to conduct tests later in the process to observe that phenomena.

After gathering relevant technical information, we began the ideation phase. Utilizing a variety of methods for coming up with ideas, we separated these ideation sessions by function. With our understanding of the customers' needs, we determined what actions and movements the upgraded system must accomplish. These are what we call the "functions" of the system. This list of functions includes lateral movement, locking into place, delivering air to track level in an adjustable way, and supporting the blower.

For the lateral movement function, we used the brainstorming method. This involved listing out ideas on a whiteboard and elaborating wherever appropriate. For the locking mechanism, we also used the brainstorming method. For the air delivery and actuation, we used a combination of sketching and brainwriting methods. The brainwriting method is a modified version of brainstorming in which participants quickly list ideas for a few minutes and immediately trade lists, at which point the participants can elaborate on other's lists. For our session, this took the form of sticky notes, each with their own idea. Finally, for the leaf blower mounting concept, we

used a sketching method in which we took turns verbalizing our ideas and bringing them to life on a whiteboard, seen below.

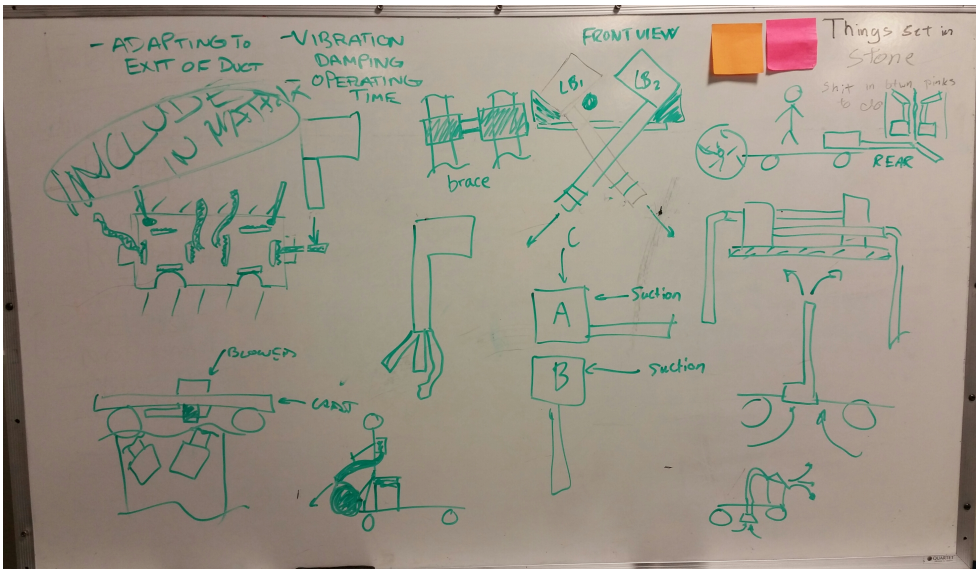

Figure 8. Leaf blower mount ideation. Sketches were made on a whiteboard used to visualize design ideas.

B. Pugh Matrices

After all the ideas were written down, we needed to narrow down our ideas to a manageable few, a methodical procedure called "controlled convergence". At first, we used our judgment to eliminate the unreasonable ideas. Then we organized our remaining concepts by function into Pugh matrices. This method involved comparing concepts against each other based on their compliance to each customer requirement. We chose datum – a benchmark – for each and determined if each concept was better, worse, or the same as the datum with regards to each customer requirement. The datum often relates to the existing system.

One result of the matrices was a score that indicated overall whether concepts were better or worse than the datum. The second result of the Pugh matrices was a narrowing of our top concepts down to a total of five. We created three matrices: one was specifically for the lateral movement function, another for the locking mechanism, and a third for nozzle design. For lateral movement, the datum was sliding on a shelf. Pugh matrices can be seen in [Appendix C, Tables C.1-C.3].

Another result we gleaned from the Pugh matrices was that combining different locking concepts could address weaknesses of individual concepts. For example, the twist locking and block

concepts were weak. The twist lock fell short in the weathering requirement but is easy and safe to operate, while the blocks were relatively weatherproof with the proper material selection but may vibrate out of position and be difficult to handle for the volunteers. We shaped these ideas into a combination block/twist locking mechanism, which became one of our top concepts.

The Pugh matrices also transformed some ideas. At first, we sketched the drawer tracks oriented vertically, but thinking about how difficult it would be to attach them to a platform/shelf made us reconsider their orientation. Common drawer slides are located on the left and right outer edges or are centrally located beneath the drawer. Our modified design utilized a below-drawer pair of slides near the outer edge of the blower system platform, which was much different than what we originally visualized.

We narrowed down the nozzle shape using Pugh matrices, but ultimately we have not yet chosen an exact shape. Given that leaf-blowing is not an exact science, the nozzle is a design for which we want to perform physical tests rather than relying on theoretical relationships. Thus, the final five concepts are full systems and are independent of selected nozzle shape. For better understanding and visualization, we sketched our top designs. The sketches can be seen below; however, larger photos can be found in [Appendix D]. The goal of these sketches was to further develop our ideas by seeing all involved parts of the blower system, including the motor, belt housing, shaft, fan, and ducting.

i. Concept 1

The first sketch is a blower system which combines the drawer slider concept for lateral movement and the pin-locking concept. The current blower system rests on a small platform, which is locked in place with a c-clamp to the existing shelf. Seen below in Figure 7, our solution is integrated by mounting the small shelf to one side of the drawer slides, while the other side mounts to the top of the shelf. This allows for 18 inches of lateral travel so the nozzle can span the width of the track. A small tab with a hole protrudes from the sliding platform. To make it more robust, the tab should be wide enough to fit two holes. Mounted to the shelf and aligned beneath the tab is a rail with seven holes spaced 3 inches apart. To lock the sliding platform in place, the operator inserts a pin into the tab hole which concentrically aligns with a hole on the rail below. Gravity holds the pin in place. The tolerance on the pin diameter and the hole diameter would be tight enough that vibration during operation is minimal.

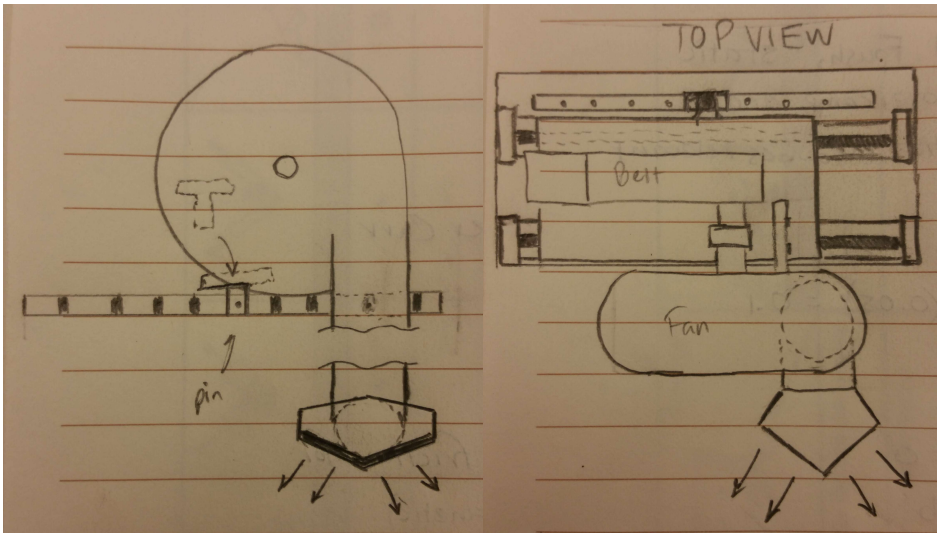

Figure 9. Conceptual sketches for a pin-lock, drawer-slide system.

ii. Concept 2

The second sketch is a system which combines the dual-rail concept for lateral movement and the twist-locking concept. Seen below, our solution is integrated similarly to the drawer slides. A pair of parallel linear rails are mounted to the top of the shelf, while the mating linear bearings are mounted to the blower system platform. With this design, 18 inches of lateral travel will be possible. The aforementioned block/twist locking mechanism will surround the sliding platform. To lock the platform in place, the operator twists a handle which functions like a set-screw. The way it is drawn, friction between the end of the handle's threaded shaft and the rail itself will keep the platform stationary. An improved design might be to permanently mount the blocks to the top surface of the shelf and have the end of the set screw contact an outward-facing surface of the sliding platform.

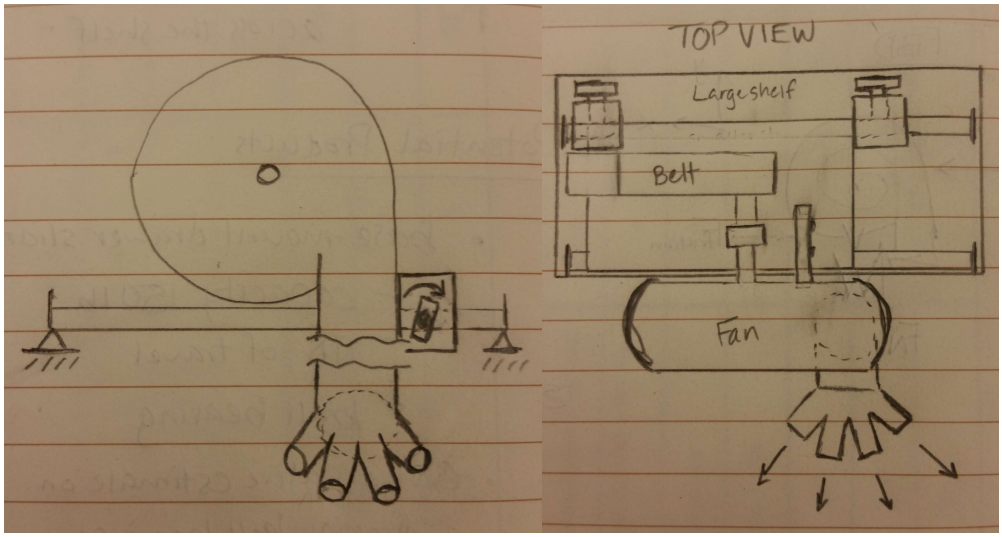

Figure 10. Conceptual sketches for a set-screw friction lock, linear rail system.

iii. Concepts 3 & 4

The system ideas discussed above make up two of the final five. Two others utilize varying combinations of the lateral movement and locking mechanism concepts. Concept 3 combines the drawer slides with a twist locking mechanism. Concept 4 combines the dual linear rails with a pin locking mechanism.

The process of controlled convergence can also result in the creation of new ideas; this is how the leaf blower ideation session was initiated. In a meeting with Dr. Hans Mayer, a fluids instructor at Cal Poly, we discussed how capacity and velocity were likely the most important upgrade to the blower system for optimal clearing of the track. Because of our pitot tube measurements and how much of our background research concerned leaf blowers, we knew that increasing the flowrate from 398 cfm to about 500 cfm was a possibility. Because velocity is directly proportional to capacity, we could increase the velocity by 25 percent without attaching a nozzle to the exit.

iv. Concept 5

The fifth and final concept involves mounting a store-bought leaf blower with an improved performance and mounting it to the existing system. This was ultimately chosen as our top concept and is described in further detail later in section IV.C. Again, these concepts are independent of nozzle design.

C. Controlled Convergence

These five concepts – four combinations of lateral movement and locking function concepts, plus a leaf blower system – were compared using a weighted decision matrix, seen in **[Appendix C]**. The purpose of the decision matrix was to compare ideas on a system level against the engineering specifications. Each specification was weighted by importance per the results of our Quality Function Deployment. The two highest weighted were the number of unprotected components and cost, but most of the specifications were weighted similarly overall. All but interfacing with track spacing were weighted nine percent or higher, and none exceeded 14 percent. Our team rated each concept on a scale from zero to ten for all individual specifications, with ten being fully compliant and zero being non-compliant.

Of the high-risk specifications, the number of unprotected components was unable to score a 10 for any of the solutions, while the minimum safe distance saw a 10 scored by all solutions.
The conclusions drawn in the overall controlled convergence were significant because the matrices highlighted the strengths and weaknesses of different concepts. For the lateral movement, a notable weakness was the exposure of drawer slides and rails to the environment which poses problems like water and debris contamination. Drawer slides use ball bearings to create a near-frictionless surface, and when lubricating grease is exposed to water, corrosion occurs. Water corrodes the smooth surfaces on which the ball bearings rely, pitting the material, which reduces the life of the bearing **[7]**.

Dirt falls under the category of debris contamination. Dirt particles that are trapped in bearing lubricant dent important surfaces, creating stress concentrations on those smooth surfaces and reducing the life of the bearing **[7]**. Similar weathering exposure exists for the linear bearings associated with a linear rail design. To combat water and debris from impacting the bearings, proper shielding would need to be incorporated into the lateral movement system.

D. Top Concept

The top concept that emerged from our convergence process was a blower system powered by a modified leaf blower. The basic idea of the design is to take an existing leaf blower, one with a higher flowrate than the existing system, and mount it to a modular wooden platform, seen below in Figure 6. This platform should be easily removable in accordance with our maximum exerted force engineering specification. If necessary, we will specify the number of personnel recommended for any movement of the platform. It would mount to the steel shelf that currently supports the hydraulic motor and blower fan system, replacing the existing system altogether. A SolidWorks rendering demonstrating what this may look like can be seen below in Figure 7.

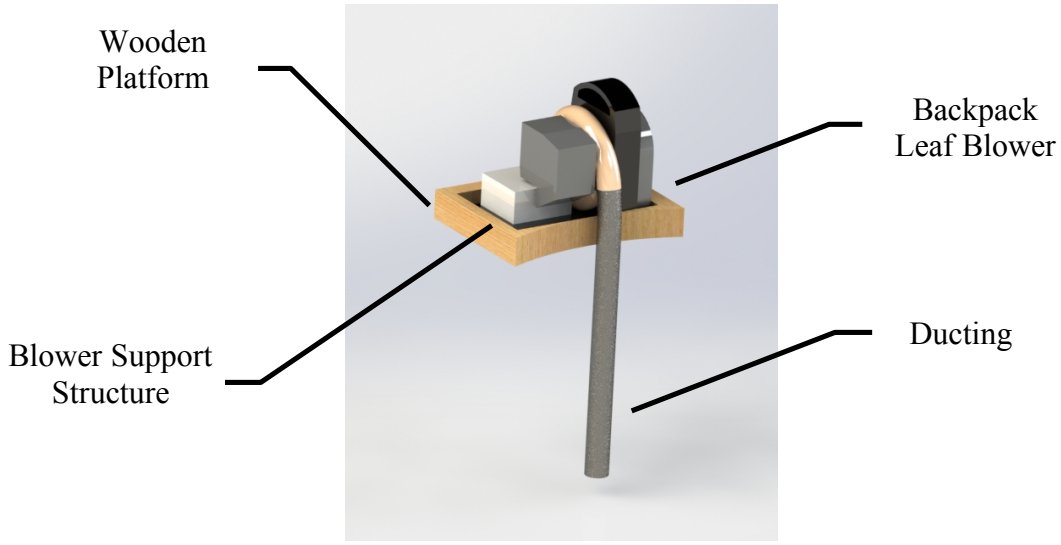

Figure 11. Leaf blower representation shown mounted in its modular wooden platform. This modular assembly would allow for easy movement of the system provided the duct has been removed.

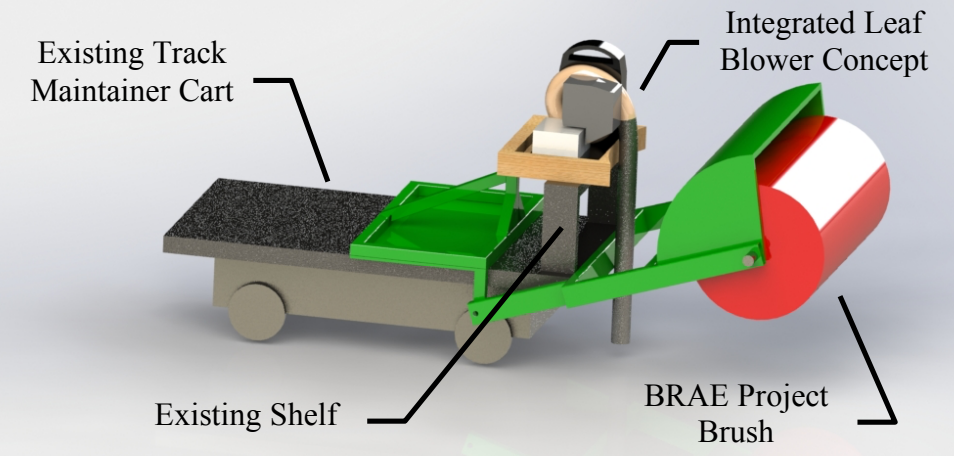

Figure 12. A concept rendering of the leaf blower when mounted onto the cart using the steel shelf as the mounting surface. It is shown alongside the BRAE brush project formed using dimensions from their technical document.

While the concept itself has been formed, there is still much geometric design to be done for this concept in addition to the nozzle design and testing we will be doing alongside this integration. The brush system in the rendering above is not accurate. The dimensions giving the BRAE document were incomplete and modifications were made that were not documented. To account for missing information, we need to take more measurements, specifically of the brush system, to ensure our blower mounting configuration does not interfere with the function of the brush. In particular, we want to ensure that the upwards position of the brush (the position it will be in while the blower is running) does not crush the duct up against the side of the cart.

As we have mentioned before, part of this project is also the design and testing of a nozzle to be fitted to the end of the blower system. The nozzle concepts need to be prototyped and tested before choosing a design and manufacturing a full-scale nozzle to test against simulated track conditions.

One limitation of our design is the lateral movement of the front ducting. Although our conceptual designs implemented some lateral movement, our chosen design does not. However, our design has two nozzles which will span the entire track width, so the lateral movement was eliminated in favor of a stationary design with more coverage.

E. Quantitative Validation

Our initial qualitative validation was done in response to a request by a volunteer that we use a larger fan in the existing system. This particular fan had a blade width of about 6 inches, 1.5 inches larger than the current fan's blade width of 4.5 inches, and a large amount of free space around the blades to suck up wood lathe debris. In order to assess whether this would be possible with the current equipment, we decided to attempt to scale the performance of the existing fan. We first found the current fan's volumetric flowrate; the operating point falling a little under 400 cfm (about the same as a lower-end leaf blower). This value seems reasonable because it is close to existing products.

After some searching we were able to find a 1936 product catalog from Buffalo Forge detailing performance data for the current blower fan **[8]**. This data included geometric dimensions and power requirements, capacity, and total head at an operating speed of 3400 rpm. While the dimensions were all scaled from blade widths of 2 inches up to 6 inches, the only power and capacity data available was for the 2, 3, and 4-inch blade widths.

Using the data for the 2, 3, and 4-inch blade widths, we were able to plot a relationship between Power in horsepower and Capacity in cfm and assign linear fits for each of the three blade widths. We then related the coefficients of the linear fits to roughly estimate a scaled Power vs Capacity relationship for the 4.5 and 6-inch fans, seen in Figure 13 below.

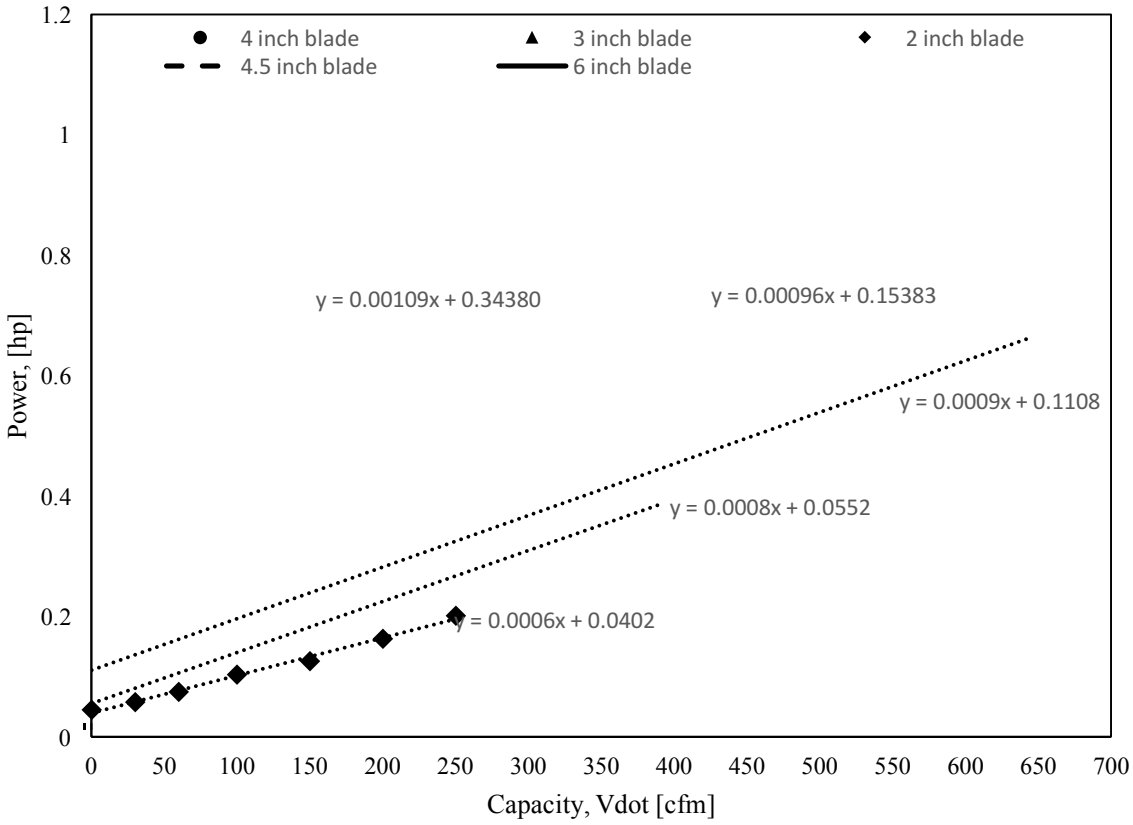

Figure 13. Power as a function of capacity. Known values are plotted for blade widths of 2, 3, and 4 inches. Predicted values are shown for blades widths of 4.5 and 6 inches.

The power required to operate both larger fans at 400 cfm was calculated in Appendix E. What was found was that to operate at the same capacity, the 6-inch fan would require about 1.4 times more power than the 4.5-inch fan. Our motor was estimate to be supplying about 0.1 hp (see Appendix G for the motor power estimation), which is already severely underperforming for the current fan. To increase the fan size would mean operating at a lower capacity (because power is maxed with the current pump), which is not the direction we want to be going. Therefore, we qualitatively ruled out this direction.

Next in our qualitative validation was an analytical comparison of using the existing system or replacing the current system with a more powerful leaf blower. What we wanted to prove with these calculations is that switching to a mounted leaf blower gives enough of a benefit to warrant the project direction.

What we found is that when using the existing blower fan (with an outlet diameter of 4 inches), we have an exit velocity of about 2840 in/sec when reducing the duct diameter to 2 inches. We also know that the current operating point is at a velocity of about 710 in/sec using the unreduced duct diameter of 4 inches. Because drag force is proportional to velocity squared, and the visual confirmation that the current blower partially displaces the ballast, we want our design to have a similar operating velocity. In order to compare the leaf blower's output to the current operating point, we calculated the exit velocity of the air when the flow from the leaf blower has been diverted into two smaller and equal diameter ducts, seen in Figure 12.

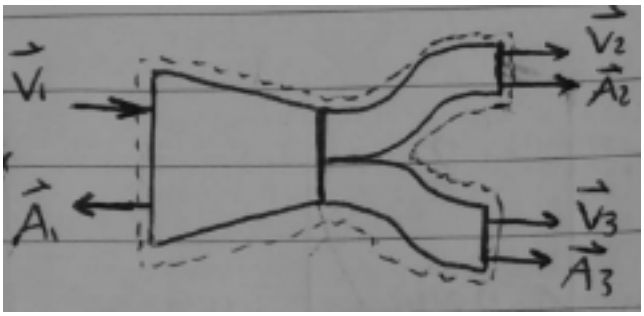

Figure 13. Sketch from leaf blower continuity calculations for a split reduction nozzle.

When we presented at the preliminary design review, we planned on using a Makita 4-stroke leaf blower. However, we have since decided to use a Stihl BR700 leaf blower instead. Using the Makita blower's operating flow rate of 526 cfm and an estimated fan exit diameter of 3.9 inches, we found that when the flow was diverted into two 2-inch diameter sections we would expect an exit velocity of about 2410 in/s. This well-exceeds the exit velocity of the current system; with two exits, we cut the exit velocity in half. Because this configuration would still have a higher exit velocity than the current operating velocity, it more efficiently covers the width of the track while increasing the drag force necessary to move leaves.

With the Stihl BR700 blower, the flowrate at full-throttle is 912 cfm, which exceeds the blowing capacities of both the existing track maintainer blower system. The basic continuity calculations we've done show that by far, the Stihl leaf blower exceeds the air volume blown by the current system and can be found in Appendix H. We have further designed the nozzle for optimal airflow direction, and we will perform various test scenarios to further optimize the proposed system's performance.

F. Nozzle Design Validation

This preliminary test addresses the concern stated in our conceptual design review of no definitive nozzle choice. We wanted our selection of the ideal nozzle shape to be based on quantitative values and physical evidence, not just our own intuition. As a result, we developed two different nozzle shapes: a triangular, “cow-catcher” design and a round duct spreading design, shown in Figure 33.

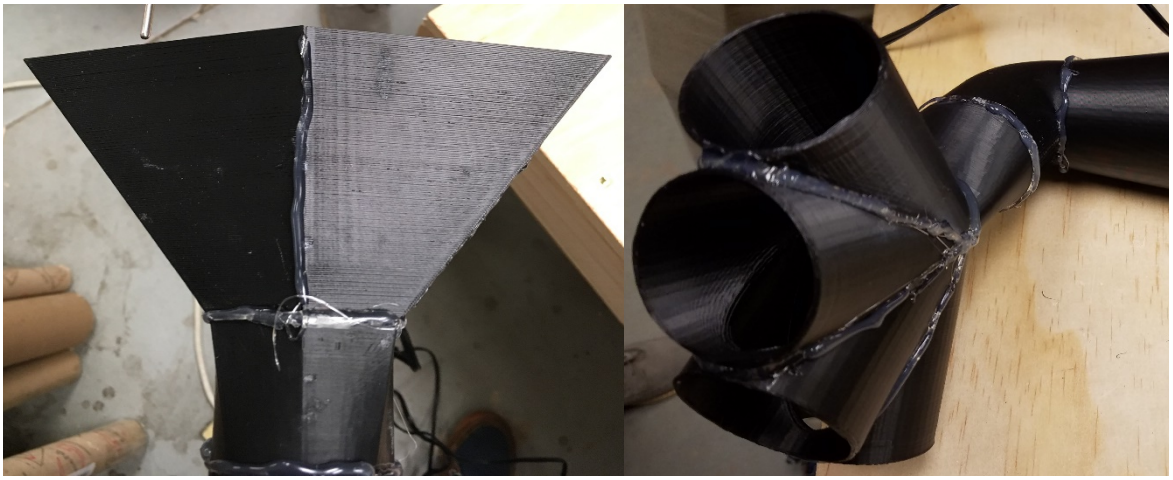

(a) Triangular nozzle design **(b)** Round branch nozzle design

Figure 14. At left, triangular “cow catcher” nozzle. At right, round duct spreading nozzle.

The test apparatus included two 3D-printed nozzle shapes of ABS plastic, a hairdryer, a camera, epoxy, hot-glue gun, a pitot-static tube, and a digital manometer. We printed the nozzles in pieces to accommodate the build plate size and minimize support material. Next, we joined the pieces together with epoxy, and because the joints were imperfect, we used hot-glue to seal the gaps. For the final construction step, we attached the nozzle inlet to the hair dryer with hot-glue (Figure 34).

Figure 15. Constructed test apparatus. Hot glue and epoxy join the hair dryer and nozzle pieces together.

Our first test was a qualitative test to identify the direction and distribution of air flow. To visualize the flow, we pointed the nozzle roughly 45 degrees from horizontal at a puddle, turned on the hair dryer, and observed the resulting ripples in the water. Figure 35 shows results of our initial test.

.

Figure 16. Flow visualization. The triangular "cow-catcher" design has a more evenly distributed and thus more desirable flow than the branched design.

The results showed us a design flaw in the rounded nozzle. Because the area contracts, the flow is concentrated at the center two ducts. We visually confirmed this result with the qualitative puddle test and used our sense of touch to feel the absence of airflow out of the side branches. We decided to redesign the branched nozzle to give a more representative result. The new design was such that the inlet area became wider as it approached the exit, seen in Figure 36.

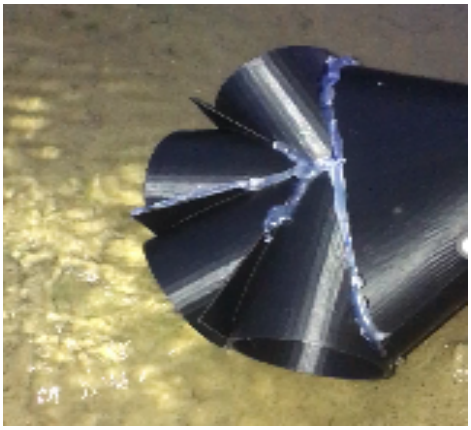

Figure 17. Redesigned branch nozzle

We observed that the triangular nozzle directed the flow in a relatively uniform distribution. The ripples in the puddle were consistent over the sweep angle of 80 degrees. We also observed that the changes we made to the branch nozzle improved its performance because the air exited through all four branches. This led us to our next step, a quantitative test.

The quantitative test used the same measurement equipment that we used at the ranch to measure the dynamic pressure of the current blower system. With a digital manometer and pitot-static tube pointed in the direction of flow, we measured the flow at different locations of each nozzle exit. For the three trials for the triangular nozzle, the measurement locations were in the center, center-left, and center-right. For the two trials for the branched nozzle, we took one measurement at each of the four exits. From these dynamic pressures, we calculated the velocity at each exit.

For the branched nozzle, exit velocities ranged from 330 to 420 inches per second, which is greater than our expected velocity of 160 inches per second. Since volumetric flow in must equal the flow out by conservation of mass, this discrepancy caused us look further into our testing procedure. We noted that our measurements for each of the four exits were made on the inside edge of the cylindrical exits (the ones closest to the nozzle centerline). The reason for this was that at the center of the cylindrical exits, the manometer read zero pressure differential and thus zero velocity. So, to register a nonzero data point, we had to modify the location of the pitot-static tube. This is not ideal because it means that the flow out of the nozzle was non-uniform. However, for the triangular nozzle, exit velocities ranged from 590 to 670 inches per second. More importantly, we held the pitot tube at various location of the exit and the nonzero pressure differentials indicated that velocity was a continuous distribution across the exit. Because the triangular duct had a relatively uniform flow as compared to concentrated flow in certain parts of the exit, we chose the triangular nozzle shape for our design.

G. Preliminary Test and Construction Plans

If the design we have chosen is approved by our sponsor, we will first buy the leaf blower and measure the critical dimensions. Based on the dimensions, we will formulate a final bill of materials that includes materials for creating a test rig. This test rig will be used to simulate track conditions while still here in San Luis Obispo. We will use this test rig to validate our nozzle choice and find the optimal positioning for that nozzle. We will be aiming to efficiently blow

leaves without moving any ballast up and over the rails. Criteria for what constitutes "efficiently blowing leaves" has yet to be developed.

When the finalized bill of materials is approved, we will begin to move forward building the platform that will be used to secure the leaf blower in place. Ideally this platform will be constructed in conjunction with the test track rig and be put through its paces during our nozzle testing. Upon the completion of our testing, we will finalize the nozzle and finish any other manufacturing. We will transport all components up to Swanton Pacific Ranch to be mounted on the cart for practical tests. Ideally the cart will be taken out onto the track and used while we watch, participate, and take notes about the system's performance. The results will be well documented so they may be analyzed further and discussed with Dr. Crabb.

H. Safety Hazard Identification

To assess the risks associated with implementing our design, we filled out a safety checklist provided by our senior project advisor. The general method for this checklist was to review each point, assign a 'yes' or 'no' based on whether each point was applicable, and then provide detailed descriptions and plans for addressing each relevant safety hazard. The checklist may be seen in Appendix I as well as the planned corrective actions

Safety related to this senior project will primarily be the responsibility of team members and secondarily the volunteers at the ranch. Since we are 166 miles away from the ranch, we have little control over how the volunteers at Swanton Pacific Railroad address safety concerns. It is our job to keep ourselves safe, and inform others of the risks associated with operating our finished product. The best we can do is provide the relevant information and make recommendations about how to be operate the leaf blower system safely. If it is within our budget, we will propose purchasing proper eye and ear protection for the operator.

One of the most important safety concerns is the level of noise produced by the Stihl BR700 blower. At 50 feet, the blower generates 75 decibels, which is within the range of recommended hearing protection for humans. As frequent operators, we will wear earplugs when using the leaf blower and taking measurements. With leaves and other debris as potential projectiles, we will also be aware of blowing direction at all times. If this means waiting a few extra seconds for the blower to shut off before taking a measurement, we will exercise patience and wait.

Figure 18. The Stihl BR700 leaf blower has a capacity of 912 cubic feet of air per minute.

The dates are important to note. Because our concept was approved, we purchased the Stihl BR700 leaf blower from the Ace Hardwar in Grover Beach on January 14, 2017. With weekends as our primary testing and construction window, we aim to have a rudimentary track section built on the Cal Poly campus by February 25. This means February 25 would be the first Saturday we could begin testing and simulation with the leaf blower. We have done an initial test with the leaf blower to determine its rate of fuel consumption. After our tests on the Cal Poly campus, we will visit Swanton Pacific Railroad and introduce the volunteers to the system. This will likely be March 4.

V. DETAILED DESIGN

A. Design Overview

The total assembly was designed to accommodate two Stihl BR 700 leaf blowers and securely mount them to the blower cart in use by the Swanton Pacific volunteers (seen below in Figure 15). The total assembly consists of 2 Blower Base Assemblies mounted to the Mounted Shelf Interface Assembly via vibration-damping mounts. The leaf blowers will each be mounted to a Blower Base Assembly and restrained by ratchet straps run across the top of the blower.

Each leaf blower will supply air to a different rigid ducting assembly via flexible urethane ducting bent to accommodate the angled output of the leaf blower. The front ducting assembly will be used to clear leaves from between the tracks and the rear ducting will push that same debris further from the track itself.

Note that a detailed Parts/Drawing Hierarchy can be found in Appendix J and the corresponding drawings in Appendix K. Additionally, detailed manufacturing information can be found in Appendix L. The Parts/Drawing Hierarchy will reference manufacturing information found in Appendix L.

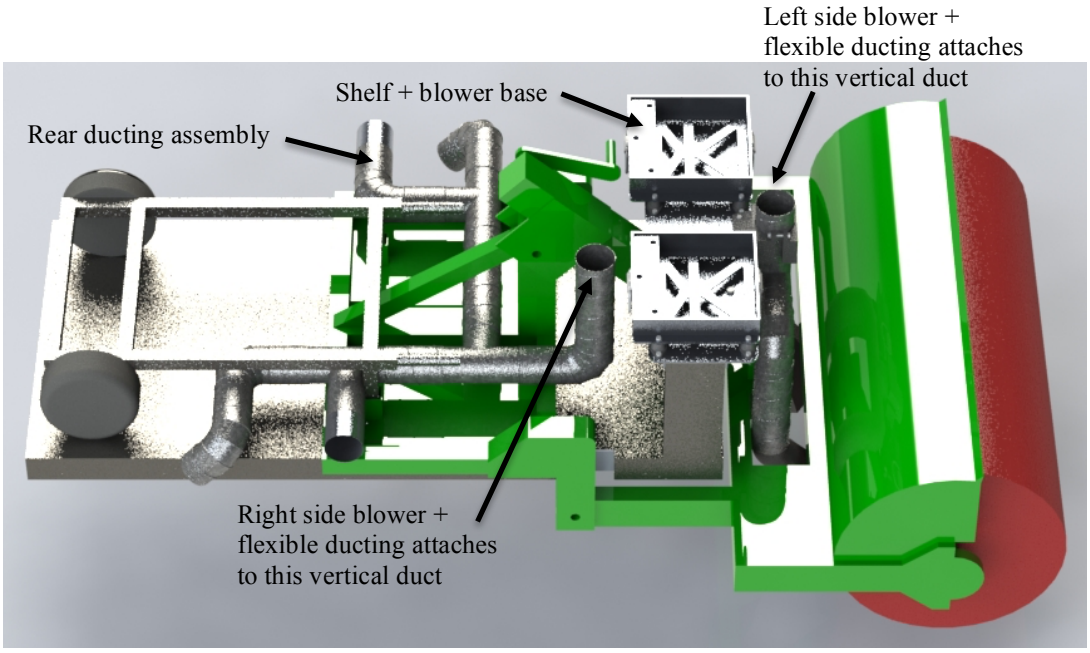

Figure 19. Total Assembly

Most of our manufactured parts will be made with stock 6061 aluminum. This is because 6061 is both lightweight and corrosion-resistant. This meets our engineering specifications requiring that the finished product be weather proof and any components that may need to be lifted by volunteers be under 20 lbs. The two parts (2 mounting strips) that are made from 1018 carbon steel will be painted to prevent corrosion are intended to be stronger because of the bending moment they will potentially have to endure once the assembly is tightened down onto the shelf.

B. Nozzle Construction/Choice (DWG. 2001)

To make our final design choice with regards to the nozzle we would be using, we printed scale models using an ABS 3D printer and attached them to a hairdryer. The two nozzles can be seen below in Figure 16 during testing. The tests we ran were two part: first we used a pitot tube and manometer to compare airflows in different areas of each nozzle's respective exit area and then we blew air through each nozzle into a body of water (this second part is seen in the below figure). Using a light, we could use the water to see how well air was being distributed over the surface of the water.

(a) Branched nozzle design **(b)** Triangular nozzle design

Figure 20. Nozzle design options during testing

Ultimately it was decided to choose the triangular nozzle (Figure 16.b) for a couple of significant reasons. The first is that the branching nozzle design (Figure 16.a) did not evenly distribute air across all the exits, even after the design was edited to try and fix the issue. Air exiting the triangular nozzle was much more evenly distributed across the entire exit area of the nozzle. The

second reason is that the air that did make it out of the branched nozzle tended to exit mainly on certain extreme edges of each branch, creating areas of high-velocity air and areas of much lower-velocity air. This kind of inconsistency was not desirable; thus the triangular nozzle was chosen, seen below in Figure 17.

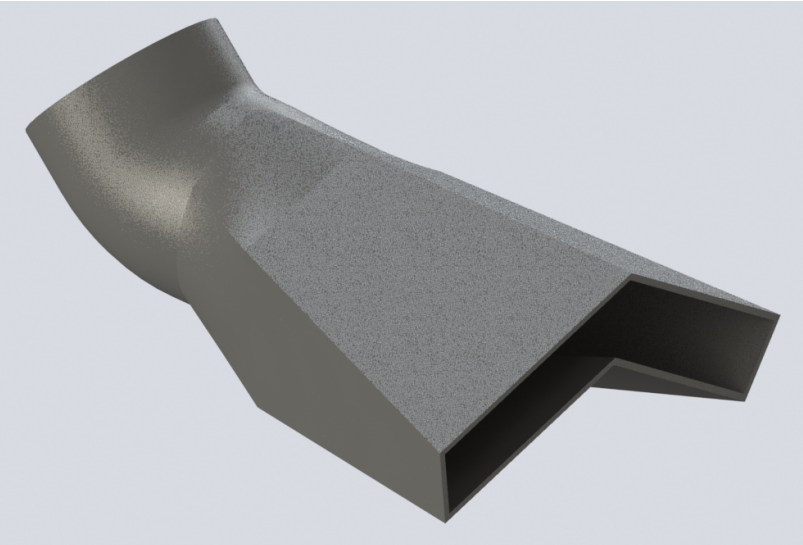

Figure 21. Printed nozzle

The nozzle will be printed as one part on an ABS 3D printer that is available to us through the Aerospace Engineering Department. In the environment we expect the nozzle to experience, direct sunlight will not shine on the nozzle and cause UV degradation. Moisture is also not an issue with ABS plastic. Physical damage is a minor concern, but our testing procedure will ensure that the nozzle will integrate with the track and ballast. In the case that damage does occur, we will plan to make multiple nozzle prints as a supply of replacements.

The nozzle's size was determined by applying the principle of continuity of fluid flow to our nozzle's ducting system. It is designed for the airflow we expect at 75% throttle. This operating point will be verified during our full-scale, post-CDR testing. See Appendix M for these calculations.

C. Mounted Shelf Interface Assembly (DWG. 1002)

The Mounted shelf interface assembly is a subassembly which serves as the interface between the leaf blower mounting surfaces and the existing shelf on which the total assembly will be sitting. As can be seen below in Figure 18, it consists of a main plate on which all components will be

mounted, vibration-damping mounts for the leaf blower mounting surfaces, a 3D-printed mount for the front ducting assembly, and two strips of steel that are used to tighten the main plate to the existing shelf. The vibration-damping mounts are intended to isolate any operational vibrations and prevent damage to the leaf blowers.

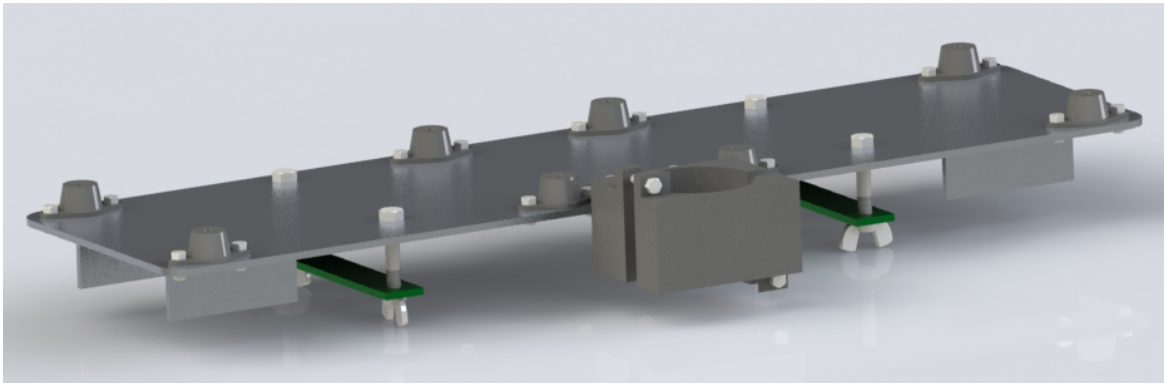

Figure 22. Mounted shelf interface assembly

i. Shelf Interface Assembly (DWG. 2010-A/B)

The shelf interface assembly is the main shelf of the mounted shelf interface assembly. It consists of a large plate known as the shelf interface and 4 locator plates used to assure that the assembly sits correctly on the shelf. See Figure 19 below.

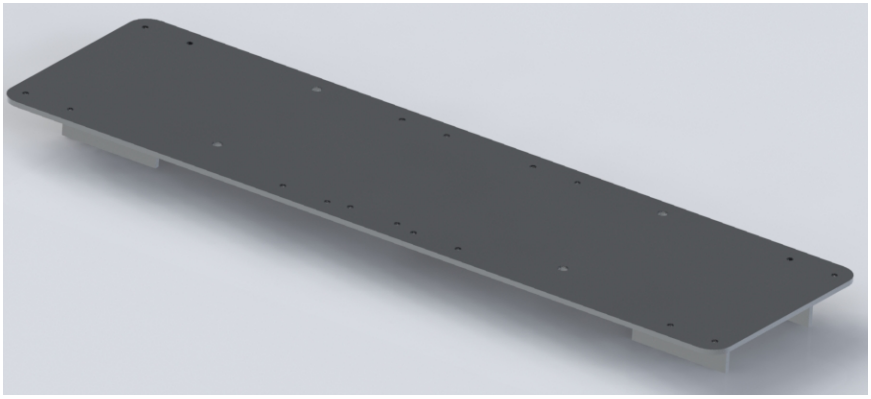

Figure 23. Shelf interface assembly

The assembly will be constructed by welding the locator plats to the shelf interface as per DWG. 2010-B. Each plate will be welded with 3 1” fillet welds on the surfaces facing out from the center of the shelf interface.

a. Shelf Interface (DWG. 3002)

The main body of the shelf interface will be plasma cut from a single piece of ¼" 6061 aluminum plate using the hanger machine shop's optical plasma cutter. This cut will define the main surface of the interface and cut fillets along the corners. After the main piece is plasma cut, 18x ∅5/16" and 4x ∅1/2" through-holes will be drilled out as per DWG. 3002 using a drill press. The final product is seen in Figure 20 below.

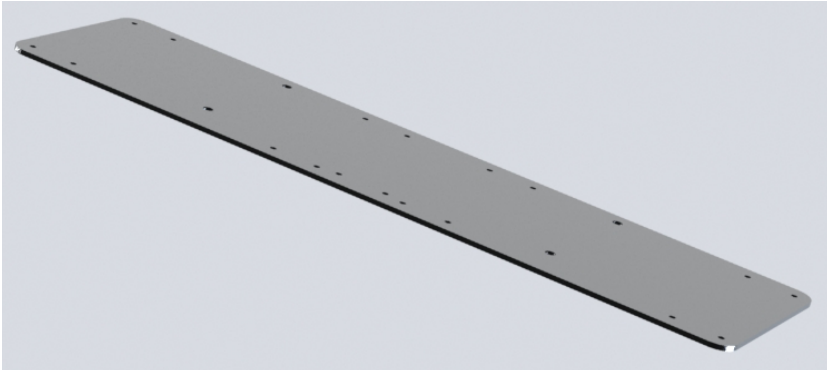

Figure 24. Shelf interface

b. Locator Plate (DWG. 3001)

Four locator plates will be cut from 2.25" wide by 0.25" thick 6061 aluminum strips. Each locator plate will consist of a 5" cut from the raw material using a metal saw. The final product is seen in Figure 21 below.

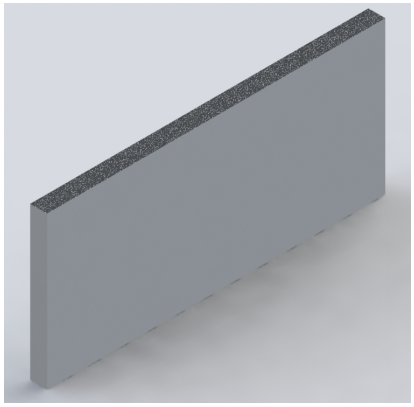

Figure 25. Locator Plate

ii. Mounting Strip (DWG. 2013)

The mounting strip will serve to tighten the entire mounted interface assembly to the existing shelf. The mounting strips will be cut from a 1.50" wide by ¼" thick 1018 carbon

steel strip. Each strip will consist of 9” cut from the raw material using a metal saw. The final product will be spray painted with green paint to prevent corrosion. The final product is seen in Figure 22 below.

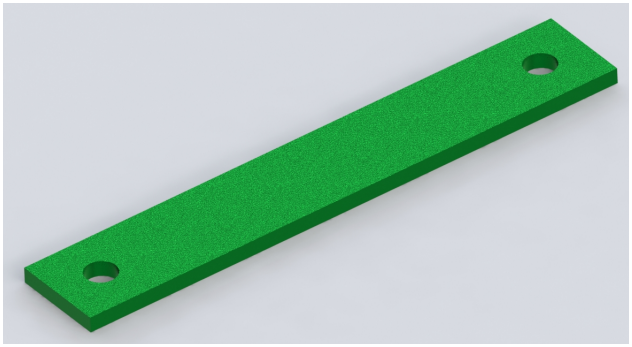

Figure 26. Mounting strip

iii. **Vertical Pipe Mount (DWG. 2026)**

This pipe mount will secure the ducting run from the leaf blower to the front nozzle. It will be attached to the shelf interface via two bolts. It will be 3D printed on an ABS printer as one piece. The two pieces can be considered one part and can be seen below in Figure 23. One piece will be bolted to the other and tightened around the vertical section of ducting until it is held in place with no other support. This is to allow for the leaf blowers to be removed separately from the ducting.

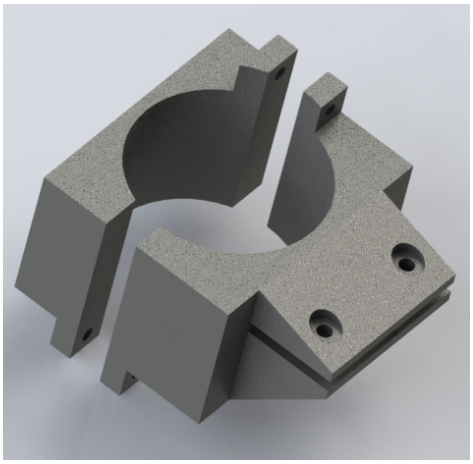

Figure 27. Vertical pipe mount

D. Blower Base Assembly (DWG. 1003)

The completed blower base assembly will serve as the mounting mechanism for each leaf blower. The leaf blower will be walled in with aluminum walls and further held in place by an aluminum

block machined to grip the blower's foothold. Finally, tie-down rings attached to two of the walls will allow a ratchet strap to be run over each blower to make sure it stays on the platform during operation but also allow for them to be removed during non-operation for storage and/or maintenance. The final product is seen in Figure 24 below.

Figure 28. Blower Base Assembly

i. Aluminum (Al) Safety Block (DWG. 2020)

This block will secure the leaf blower via the plastic foot brace used during startup. First a 12" length will be cut from stock length of 2"x2.5" 6061 aluminum using a metal saw. Then 3x ∅0.33" through-holes will be drilled as per DWG. 2020 using a drill press. Those holes will then be countered bored with ∅0.69" to a depth of 0.66" using a mill. The mill will also be used to mill 2x R0.50" fillets on the corners facing away from the leaf blower as per DWG. 2020 using a rotating vise. Finally, a mill will be used to cut an R5.47" arc into the block as per DWG. 2020 using the same rotating vise. The final product is seen in Figure 25 below.

Figure 29. Al safety block

ii. Base Assembly (DWG. 2021-A/B)

This assembly will be the physical surface on which the leaf blower will be mounted. Each assembly consists of 2 side walls and 2 tie-down walls welded to a base plate as per DWG. 2021-B. Each of the four walls will be welded at the corners with 2” long fillet welds on the inside of the corners. The side walls will be welded to the base using 6x 0.5” long fillet welds along the outsides of both walls. All welding should be done as per DWG. 2021-B. The final product is seen in Figure 26 below.

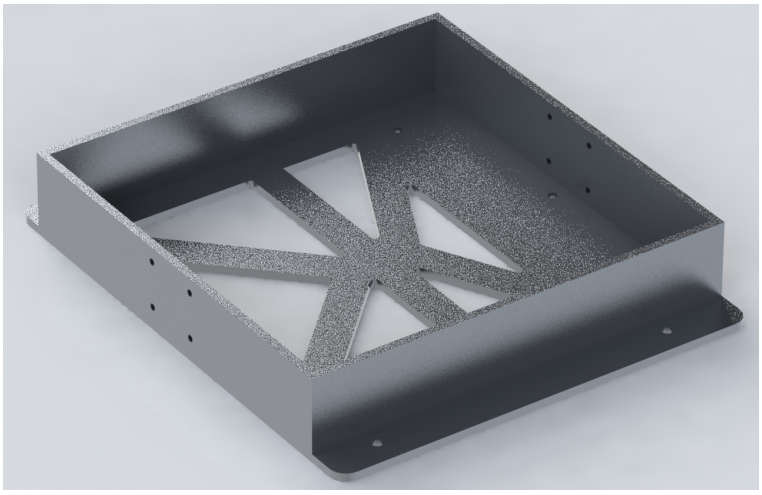

Figure 30. Base assembly

a. Base Plate (DWG. 3003)

Each base plate will be plasma cut from a single plate of 6061 aluminum using the optical plasma cutter as per DWG. 3003. This cut will include the basic defining dimensions of the base plate, the webbing to reduce weight, and the filleted edges. After these cuts are made, we will drill out 4x ∅5/16" and 3x ∅0.257" through-holes using a drill press as per DWG. 3003. The 3x ∅0.257" through holes will then be tapped using a 5/16"-18 UNC tap. The final product is seen in Figure 27 below.

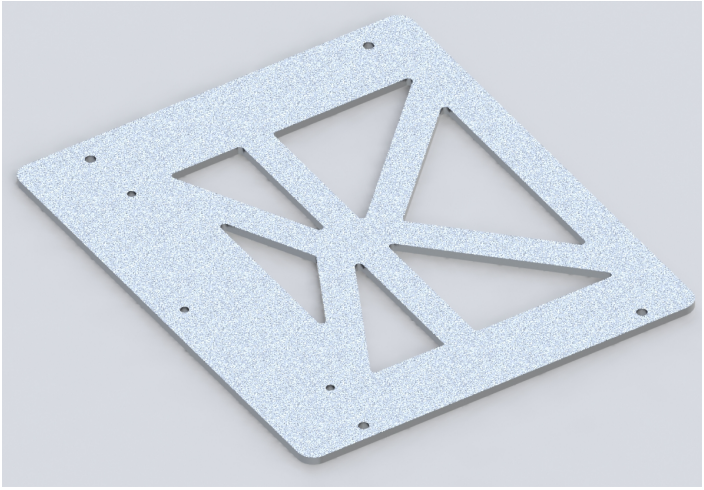

Figure 31. Base plate

b. Side Wall (DWG. 3004)

Each side wall will start as a 13" cut from stock 2.25" wide by 0.25" thick 6061 aluminum using a metal saw. Each corner will then be cut to 45° using a metal saw so that the longer edge will be 12.75" as per DWG. 3004. The final product is seen in Figure 27 below.

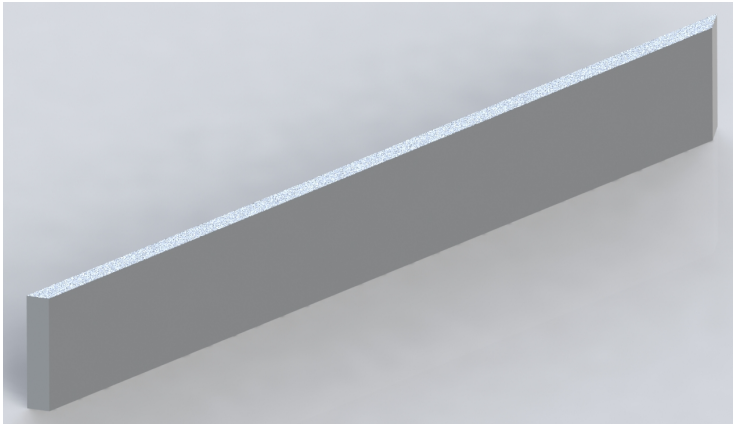

Figure 32. Side wall

c. Tie-Down Wall (DWG. 3005)

Each tie-down wall start as a 13” cut from stock 2.25” wide by 0.25” thick 6061 aluminum using a metal saw. Each corner will then be cut to 45° using a metal saw so that the longer edge will be 12.75” as per DWG. 3005. Then 4x ∅0.20” through-holes will be drilled out using a drill press as per DWG. 3005. These 4 holes will then by tapped using a 1/4”-20 UNC tap. The final product is seen in Figure 29 below.

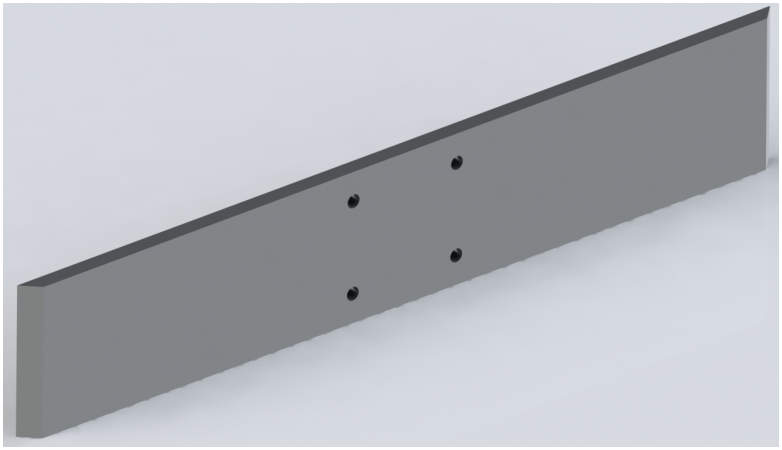

Figure 33. Tie-down plate

E. Ducting

The ducting is the system of pipes that delivers air from the leaf blower to a desired location. There are two ducting systems in our design. One leads from the left BR700 leaf blower to the forward-facing, triangular nozzle. The other extends from the right BR700 leaf blower to two rear exits along the side of the track maintainer cart.

i. Construction

The front ducting system’s function is to deliver air to track level in a manner that expels leaves out from between the rails. Its source is the left-side BR700 leaf blower. From the leaf blower body, a flexible tube curves such that its exit points vertical. A tee mates vertically with the flexible tube and horizontally with two elbows. The elbows mate with straight ducting. The bottom end of the ducting mates with custom nozzles that we plan to 3D-print at Cal Poly. These nozzles curve forward such that air blows at an angle between 30 and 45 degrees from vertical. Seen below in Figure 30, the nozzles sweep about 40 degrees each and create a crossflow, which we plan to calibrate as part of our tests. This design should eliminate the need for lateral movement because the two nozzles provide coverage of the full track width.

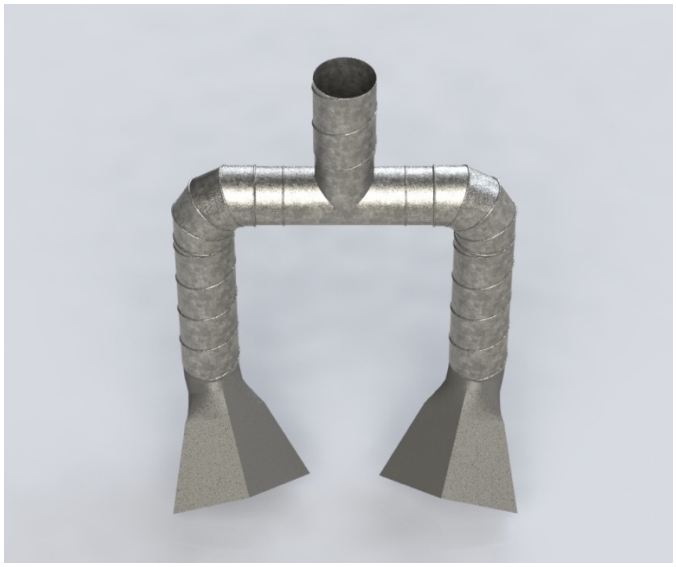

Figure 34. Front ducting system. Splits into two nozzles, which reduce the exit velocity to one comparable to the original blower system but distributes the flow in a more efficient manner.

The rear ducting system's function is to deliver air to the ballast surface just outside both rails to push any leaves that were expelled from between the rails further away from the track. This requires a second leaf blower because of the increase in required airflow. Its source is the right-side BR700 leaf blower. From the leaf blower body, its flexible tube curves to horizontal to meet an elbow. The elbow mates with a vertical straight section of ducting. The duct extends down to another elbow. At this point, the rest of the ducting rests on top of the green frame that is mounted to the cart. The system is shown below in Figure 31.

Figure 35. Rear ducting network. Diverts to a minimum of two exits, and for safety, a maximum of four.

The ducting splits with a tee. The line flow continues down the right side of the cart, while the branch flow diverts laterally across the cart to the left side. With a tee, both sections split again. The horizontally-oriented section is a damper, so-called for its ability to block airflow, and its safety benefits will be discussed later. The elbows are the intended exit, are pointed at a downward angle towards leaves that sit outside the rails.

a. Spiral Ducting (DWG. 2003, 2004, 2005)

For the ducting material, we chose galvanized steel due to its relatively cheap cost, strength properties, and resistance to corrosion. We plan to purchase three two-foot sections of galvanized ducting and cut them to length using tin snips or, if possible, the horizontal bandsaw. Because heated galvanized steel can emit toxic fumes, we will consult with a shop technician before cutting the ducting to length. The lengths we will need are 6 inches, 12 inches, and 16 inches.

ii. Safety

We selected spiral crush-resistant ducting rather than standard 26-gage cylindrical ducting due to the improved strength and rigidity of spiral ducting. This is a concern because the ducting will be in an environment where it might be crushed or punctured. The rear ducting assembly will be located at the surface of the track maintainer cart, where an operator might step if they are not careful. Another potential problem mitigated by stronger ducting is the dropping of a tool from eye level, which could puncture standard ducting. Without available space for covered protection, we thought it best to select the stronger ducting to mitigate risk of ducting failure.

One of the most significant elements of our ducting design is the inclusion of a damper. With predicted exit velocities for the rear ducting system of about 700 inches per second, which is comparable to the maximum exit velocity of the original blower, we designed the rear blower system with a way to reduce that exit velocity if someone walks alongside the track maintainer. The damper is essentially a valve. When in the open position, the damper will divert the airflow such that the exit velocity decreases by a factor of two. This will help mitigate the risk of projectiles (leaves, ballast, other debris) hitting a volunteer nearby the operating blower system.

iii. Calculations

We desired to do a simplified calculation for the head loss associated with each section of ducting. Because the rear ducting configuration is more complex than the front, we focused our calculation

on the rear. We started with an initial ducting configuration which geometrically integrated with the existing track maintainer. We then labeled all components that contributed a minor loss, including 90-degree elbows and diverging tee paths **[10]**.

The goal of the calculation was to determine a configuration with similar loss coefficients for both exits, which means similar flowrates. Loss coefficients are denoted by the variable K_L. Our initial configuration had a minor loss coefficient sum of $K_{L,left}$ equal to 3.2 and a $K_{L,right}$ equal to 1.6. The 2 to 1 ratio means that the hydraulic resistance of the ducting leading up to the left exit was significantly larger than that of the right exit. To combat this imbalance, we decided to swap the locations of the damper and left exit bend. This made the exit in the direction of line flow rather than the branch flow and reduced the loss coefficient sum $K_{L,left}$ to 2.1. With a smaller ratio of minor loss coefficients between left and right exits of 1.3, the hydraulic resistances and hence the flowrates out each exit have less disparity. See **Appendix N** for the detailed calculation.

F. Maintenance

For most maintenance, we will tell our sponsor and the volunteers to reference the Stihl BR700 user manual provided to us with the blower and available online. In addition to lists of assembly instructions, start-up instructions, and warnings the user manual has a table of recommended maintenance actions for different components of the leaf blower and the recommended schedule of when these actions should be taken **[9]**. The table can be found on page 24 of the user manual, part of which is shown below in Figure 32. Apart from the user manual, our system should have no other maintenance concerns.

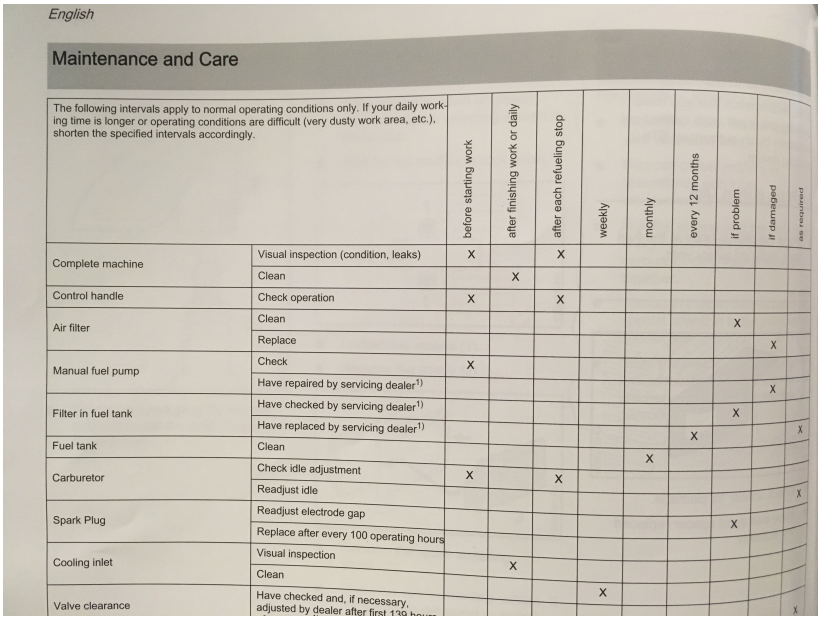

English

Maintenance and Care

The following intervals apply to normal operating conditions only. If your daily working time is longer or operating conditions are difficult (very dusty work area, etc.), shorten the specified intervals accordingly.		before starting work	after finishing work or daily	after each refueling stop	weekly	monthly	every 12 months	if problem	if damaged	as required
Complete machine	Visual inspection (condition, leaks)	X		X						
	Clean		X							
Control handle	Check operation	X		X						
Air filter	Clean							X		
	Replace								X	
Manual fuel pump	Check	X								
	Have repaired by servicing dealer[1)]								X	
Filter in fuel tank	Have checked by servicing dealer[1)]							X		
	Have replaced by servicing dealer[1)]						X			X
Fuel tank	Clean					X				
Carburetor	Check idle adjustment	X		X						
	Readjust idle									X
Spark Plug	Readjust electrode gap							X		
	Replace after every 100 operating hours									
Cooling inlet	Visual inspection		X							
	Clean									
Valve clearance	Have checked and, if necessary, adjusted by dealer after first 120 hours				X					X

Figure 36. Maintenance chart example from Stihl User Manual.

One of the concerns regarding the leaf blower that was brought to use by a volunteer was fuel used in the leaf blower and, more generally, in all small motors. We were told (and it was confirmed) that as the ethanol content in widely available gasoline increases, it harms small motor systems more and more. Because of the ethanol in the gas, moisture is more easily introduced into the system and will destroy certain seals in the carburetor. This damage over time ultimately decreases the lifespan of the unit and will require the carburetor to be replaced.

To this effect, there are certain considerations listed within the user manual that should be considered. First, be sure to mix the gasoline and oil at the correct 50:1 ratio, the motor is a two-stroke air-cooled motor and requires the mixture. Second, use gasoline with a minimum octane rating of 89 and a maximum ethanol content of 10%. The high-octane rating will keep engine temperatures normal and the low ethanol content will preserve the engine's performance over a longer period. Third, when the leaf blower is finished operating either run the tank dry or empty the tank manually to make sure minimal amounts of fuel are left to induce moisture into the system. Finally, it is recommended to not store any gas/oil mixture for longer than 30 days. These maintenance recommendations will be listed and discussed alongside other important maintenance and warning information in a user manual given to the volunteers at the end of the project. This will be given, of course, alongside the actual Stihl user manual.

G. Cost Estimate

The completed Bill of Materials (BOM) can be found in Appendix O. The chart is divided into two sections: parts and supplies and raw materials from which manufactured parts will be machined. The Manufacturing Details in Appendix L will reference specific raw materials by number to specify what machined parts will come from what raw materials. Both sections list a description of the item, the unit price, the number of units, the total part cost, the tax associated with offline purchases, and finally the source and, if applicable, the part number. The bought parts have their associated drawing number listed and the raw materials have an associated number listed used for identification in the Manufacturing Details.

Each respective section has a totaled cost and the combination of those two numbers represents the total estimated cost for the duration of the project. Currently our estimated cost rests at $2346 for the complete two-blower system. Out of that number, $1100 is spent on the two leaf blowers. Our second largest overhead expense is our raw materials which will cost a little over $480. Unfortunately, while the totaled cost does include tax for the items bought in-store, it does not include an estimated shipping cost as McMaster (our main online supplier for raw materials) does not give any shipping estimates.

H. Design Validation Plan

There are six tests we plan to execute to validate our design. These tests will be performed with a defined acceptance criteria to determine if our design meets the engineering specifications we defined in the early stages of the project. The relevant specification will be mentioned for each test. See Appendix P to view a table organizing our test plan.

i. Operating Time

The target operating time for engineering specification 4 is 90 minutes. Our test consists of running the completed blower system along the full length of track at Swanton Pacific Railroad. We will use a clock to measure the amount of time required to clear the leaves. After we decided to carry out this test, the washout circumstances at the ranch have placed restrictions on the full-track test (Figure 37). We will modify our test to run the length of available track, which we estimate to be about half of the entire track, and extrapolate our run time based on distance traveled. Because our test has a considerably smaller scope than before, we will run this test three times. The relationship

we will used for extrapolation is shown below in Equation 1; it is based on our assumption that the velocity of the cart is constant.

$$t_{total} = t_{measured}\left[\frac{x_{total}}{x_{measured}}\right] \quad (1)$$

ii. Number of Passes

The target number of passes for engineering specification 3 is two full passes of the track to clear it of leaves. Like the operating time test, we originally desired to run the completed blower system along the full length of track until it was clear, but again, we must extrapolate our results due to the washout, shown below. We cannot use the same equations above because a pass of the track consists of a trip down and back and, as a result, must be an integer value. As mentioned before, three tests shall be sufficient to validate our design.

Figure 37. Washout circumstances at the ranch have required us to modify our testing plan.

iii. Installation

Our sponsor requested that the design solution we choose should allow for the leaf blower to be removed from the track maintainer cart and used for its intended purpose. We plan to test our design by giving the volunteers instructions for how to remove and re-install the blower base from the cart and subsequently giving them the chance to do so with our supervision. One test shall be sufficient.

iv. Ideal Blowing Power

Engineering specification 6 requires the upgraded blower system to expel leaves from between the track while also minimizing the movement/removal of ballast from between the tracks. We plan to implement a two-part test to validate that our design meets this requirement. The first test will take place at the completed test-track section we will build on the Cal Poly campus. We will simulate track environment with rails and ballast imported from Swanton Pacific Railroad. We will distribute dry leaves between the rails, simulating the condition of the leaves at Swanton. Finally, with our nozzle attached, we will walk the leaf blower along the track at a pace of 2-3 mph, simulating the movement of the track maintainer cart. This test we will run 10 times. We will run the same test 10 more times using wet leaves. Our design will be validated if no ballast is displaced from between the tracks. The second part of the test will be to observe our blower system in action at Swanton Pacific Railroad and by inspection, confirm that our design does not displace ballast from between the tracks.

v. Actuation Force

Engineering specification 2 requires the force necessary to actuate any mechanisms operated by an individual to not exceed 20 pounds force. As mentioned, the force of 20 pounds was cited by OSHA as a reasonable expectation in the push-pull direction. The actuation force in our design is the yank of the cord-start on the leaf blower. We will test this using a force gauge. Ten measurements shall be sufficient to determine if the force exceeds 20 pounds.

vi. Nozzle Track Clearance

Engineering specification 7 requires the nozzle to interface with the spacing between the rails. With the dampers between the shelf interface and blower base in our design, the nozzle may experience deflection in the vertical direction. Our test will be to take the completed blower system on the track and use a ruler to measure the clearance between the rails and nozzle. We will also compress the dampers by adding weight to the blower base as part of this test. To ensure the nozzle is not damaged during this test, we will not use the actual nozzle, but an object that is representative of the nozzle. Ten measurements shall be sufficient to validate our design.

VI. MANUFACTURING

The manufacturing involved in production final product was relatively simple. All welded assemblies were welded with a water-cooled TIG welding machine in the Hanger. The walls of the blower base were welded to each blower base plate and the locater places of the shelf interface assembly were welded to the shelf interface.

A. Blower Base Assembly

Starting with the blower base assemblies, we made use of the vertical bandsaw in the Hanger Machine Shop to make our wall sizing cuts and 45-degree angle cuts. Some difficulties were encountered using this tool, most notably that the blade would bend at the end of each cut, giving us uneven surfaces where the walls make contact. After sanding down those surfaces, the walls were slightly undersized for what we had designed. Four of the 8 walls cut were tapped with a 4-hole pattern in order to mount the tie-down hooks (Figure 38).

Figure 38. Tapping the four holes to mount tie-down hooks.

The blower base plate was then cut on the optical plasma cutter (seen in Figure 39). Some problems were had with the thickness of material being used, but once a shop tech helped us finalize settings we made relatively clean cuts. The cuts were made with a cutting torch following a 1:1 drawing of the base plate via an optical sensor. Each contour (closed line) was cut individually. There were a couple of points where the optical sensor would have trouble reading the line which would require tracing over the line or cleaning off debris. This wasn't a problem when cutting because we would trace over each contour of the drawing before cutting to check for issues.

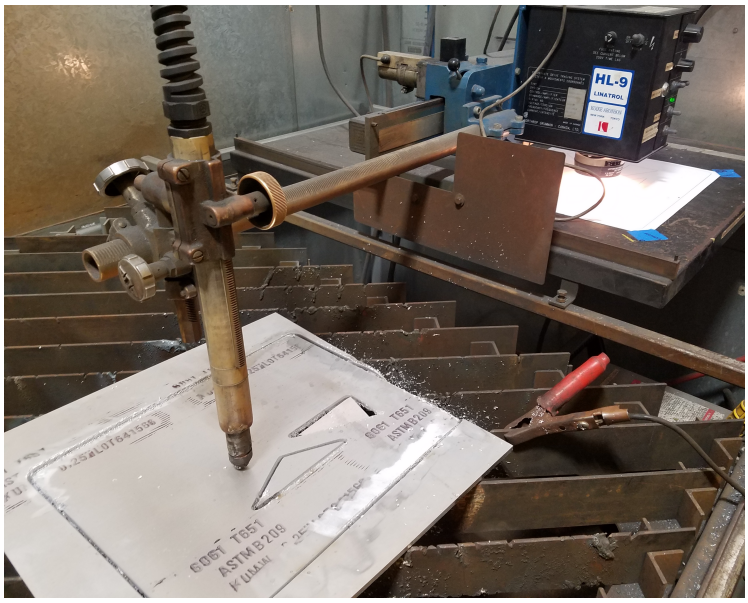

Figure 39. Optical plasma cutter. On the right is the optical sensor with the 1:1 drawing taped down underneath. On the left is the cutting torch.

There was a large amount of machining done to reduce it to the designed size. A rougher end mill bit was used to mill out the slot to the designed sizes (Figure 40). The holes that would have housed screws to secure the safety block to the blower base plate were drilled out all the way through and then counter bored on the drill press (Figure 41).

Figure 40. Milling out the slot on the safety block part.

Figure 41. Drilling out safety block counter bores.

B. Shelf Interface Assembly

The shelf interface assembly consisted of simpler pieces to machine or make. The shelf interface itself needed only a one cut to cut it down to size followed by drilling out the hole patterns for all the pieces attached. The strips used to tighten down the shelf interface were each cut from stock pieces of steel. The locator plates were cut from stock pieces of aluminum. The more interesting part of the shelf interface was the 3D printed ducting clamp. Each of the two piece was printed individually out of ABS with a 30% infill. Multiple iterations were printed to account for design changes.

C. Ducting Assemblies

All ducting pieces were cut down to length using a metal hacksaw. Flexible ducting was attached using hose clamps and duct tape to seal any loose connections. The two nozzles used were each 3D printed in three pieces and bonded together using acetone and superglue. The two final ducting assemblies can be seen below in Figure 42.

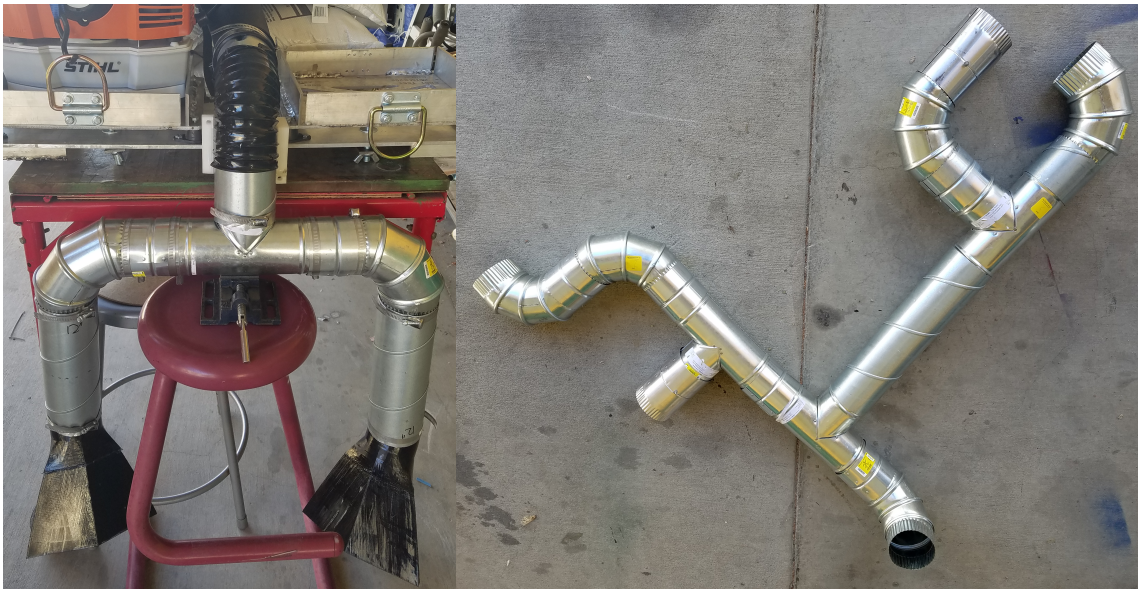

Figure 42. On the left is the completed front ducting assembly with nozzles. On the right is the completed rear ducting assembly.

VII. TESTING

A. Operating time maximum limit of 90 minutes

This test was not feasible to run due to the track conditions at Swanton Pacific Railroad. After the ballast was washed out about one-third of the total track length, we planned to push the track maintainer down and back along the reduced distance and extrapolate the operating time. We thought this test could still be representative of the total time to clean the track, in part because the foliage and debris would accurately cover the track. However, with the trains inoperable and the track removed before reaching tree coverage (see Figure 43 below), we decided the test would not give an accurate representation of how much time it would take to blow the leaves out from between the railroad tracks. With more time and permission from the ranch, we could have covered the track with leaves by hand and implemented a test further scaled-down than initially planned.

Figure 43. The track was removed beyond the signal, where the tree cover is located.

B. Maximum number of full passes less than or equal to two

For similar reasons, we decided this test at Swanton Pacific Railroad was not feasible.

C. Functions can be operated by older volunteers

Rather than have the volunteers install and remove the blower system, we decided to measure the weight of the system using a bathroom scale. The weight of the assembly containing the shelf and both blower bases, without the leaf blower, was 30 pounds. With the four-foot length of the shelf,

we recommend that two people work together to carry it, resulting in 15 pounds of lifting force required per person. This is well within the range of safe lifting load recommended by OSHA, which says 50 pounds is where injury risk increases significantly.

D. Airflow cannot blow ballast over rails

The purpose of this test was to determine if the critical flowrate for displacing ballast out from between the tracks was within our operating range for the blower system. We desired to test this first on a section of track we built on the Cal Poly campus, and do a secondary check at Swanton Pacific Railroad. Based on the test results for our simulated track section behind the Bonderson Projects Center, we deemed the secondary test unnecessary.

To simulate the track conditions as if at Swanton, we asked our sponsor to bring the same supplies used at the railroad to Cal Poly. On April 11, one of the volunteers brought us 16 wooden railroad ties, a 15-foot section of snap-track, and 2 giant crates filled with ballast. We communicated with Virgil, the head of the Bioresource and Agricultural Engineering shops, and Eric Pulse, to coordinate the transport of ballast from one shop to the work-area behind the Mustang 60 machine shop. After rolling handcarts loaded with crossties and carrying the snap-track down the hill to Bonderson, we shoveled all the ballast out of the crates and into a small enclosure made of crossties. On May 12, we constructed our small section of track. Below, our process is depicted in Figure 44, and completed track in Figure 45.

Figure 44. We shoveled the ballast out of the crates (at left) and into an enclosure of wooden ties (at right).

Figure 45. Completed track section.

We ran our ballast-blowing test on May 13. We attached the front ducting assembly to the leaf blower as if it were to be installed on the cart. Dustin then put on the backpack blower, holding the front ducting in his right hand, pull-started the blower, and walked along the track with the ducting about an inch above the rails. Our detailed test procedure may be seen in Attachment Q. For our first test at 75% throttle, no ballast was blown out from between the rails. Because our first test was successful at 75%, we decided to adjust the throttle to 100% and observe. During this second test, no ballast was displaced out from between the rails. Given the results, we then ran a third test to observe how well the blower system removes leaves from between the rails. In Figure 46, we have shown images of the track before and after blowing leaves.

Figure 46. Before and after one pass of the front ducting system at 75% throttle

From a qualitative standpoint, this test was very successful. The dry leaves we collected and scattered were displaced from between the rails. Also, no ballast was displaced, meaning the presence of leaves did not change the results of our previous tests. From this test, we determined

that 75% throttle is a suitable setting for moving dry leaves. One thing we hoped to have tested at the railroad was the effectiveness of 75% throttle for moving wet leaves.

Addendum to 4: Exit velocity measurement

Our design validation plan was updated in April to include measurements that utilized some sort of statistical analysis. We decided to measure the distribution of air exit velocity for each nozzle of the front ducting system at varying percent throttle. The test setup is shown below in Figure 47, with the water manometer in the bottom right.

Figure 47. Test setup for quantitative nozzle exit velocity test.

A detailed test procedure is described in Attachment _. To summarize, we took five measurements for each nozzle at three different percent throttles. This test was aimed towards giving us numerical evidence of the validity of our nozzle sizing calculations. Shown below in Figure 48 are the different locations for each differential pressure measurement.

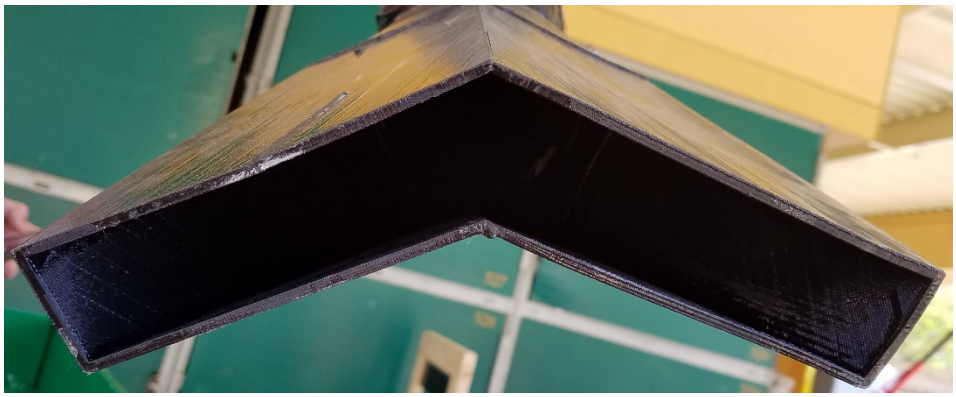

Figure 48. Measurement locations.

The results of our test are best described by scatter plots. Shown below in Figures 49 and 50 are comparisons of exit velocities for each nozzle at three different percent throttles.

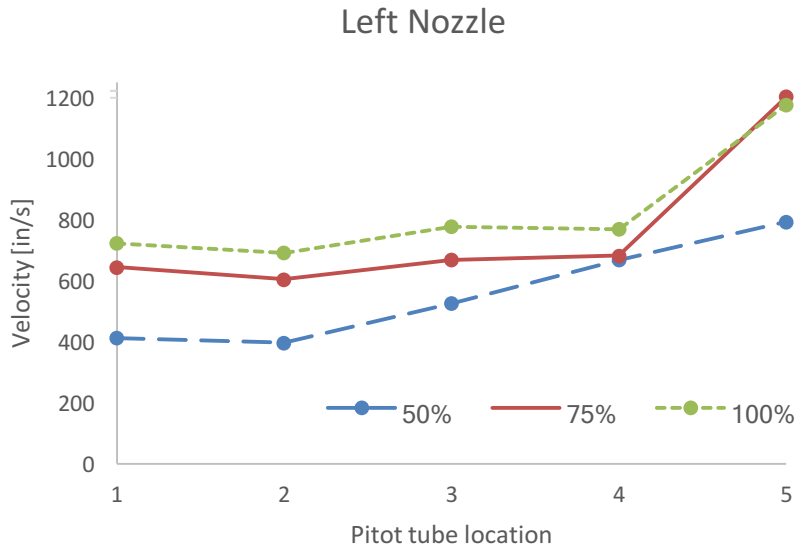

Figure 49. Left nozzle comparison of exit velocities at different percent throttle.

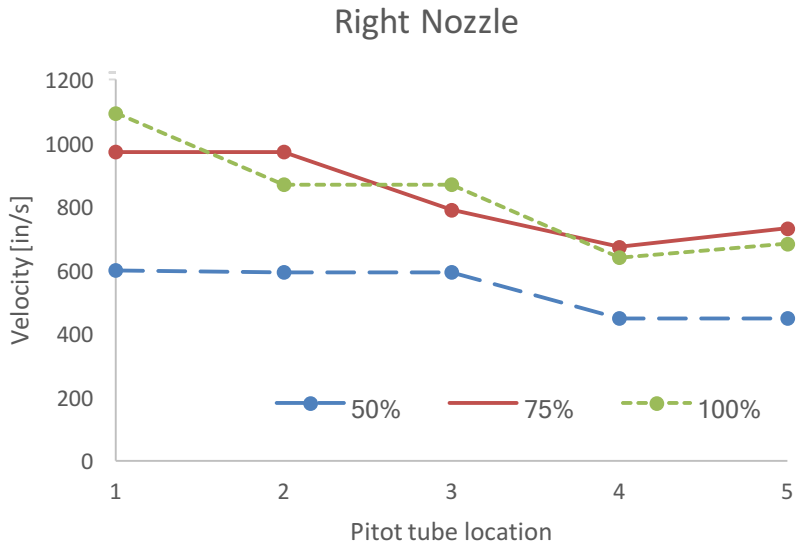

Figure 50. Right nozzle comparison of exit velocities at different percent throttle.

These plots are notable because they show that the difference between 50% and 75% throttle is significant, but the difference between 75% and 100% throttle is marginal. In fact, for the right nozzle, the exit velocities at 75% and 100% throttle are essentially the same. They also show that for both nozzles the exit velocity is faster at locations closer to the center of the cart. These locations are left number five and right number one.

Another comparison we made is the difference in exit velocities between left and right nozzles at 75% throttle, shown below in Figure 51.

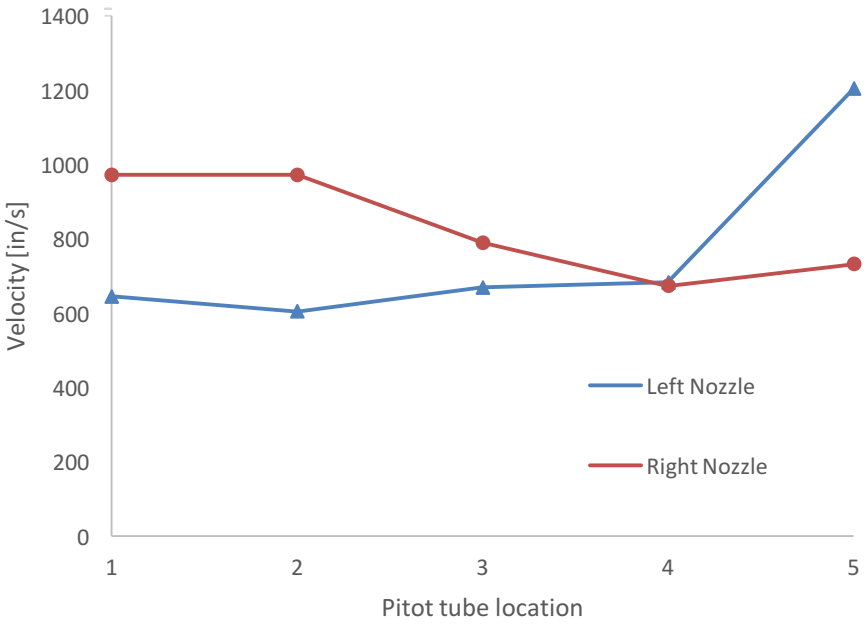

Figure 51. Comparison of left and right exit velocities at 75% throttle.

This plot shows that left and right nozzles intersect at a velocity of about 700 inches per second. This validates our design because we designed the system and sized the nozzles to expel air at 700 inches per second. It also shows that the right nozzle has the higher average velocity, but the left nozzle has the highest single velocity. This plot also appears to validate the assumption we made that the flow is symmetric, approximately equal for both nozzles.

We wanted to approach the data from a statistical perspective. An observation we made about the 75% data was that the high velocities were measured at the inner edge of each nozzle, and the lower velocities were measured at the outer edges. Figure 52 shows what is referred to as the outer and inner edges.

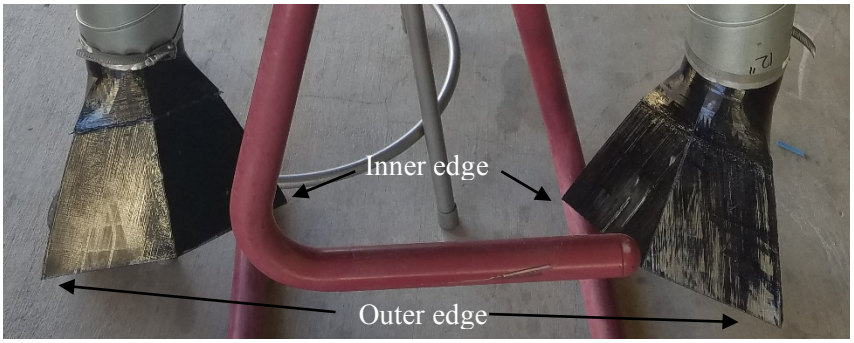

Figure 52. Schematic of outer and inner edges

We plotted the same 75 percent velocity data from the previous plot, but with the outer and inner edges matched up. It is shown below in Figure 53.

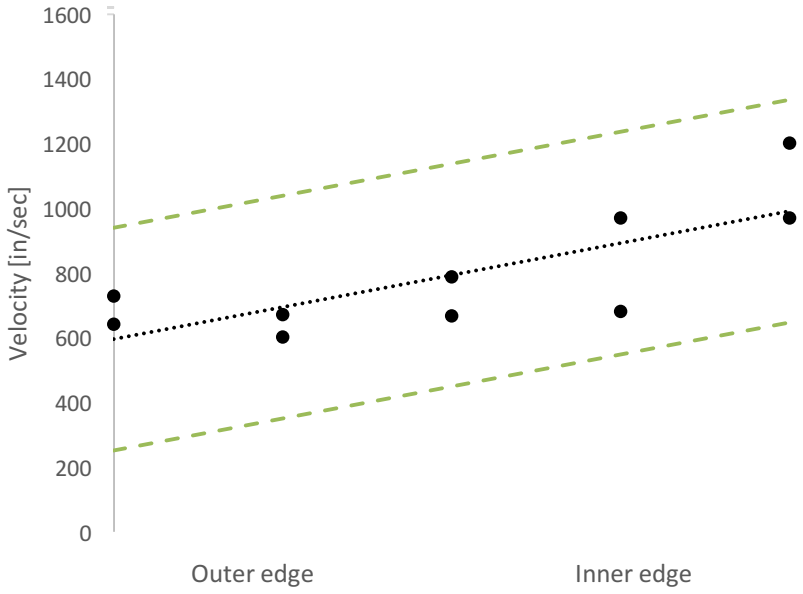

Figure 53. Linear regression fit and corresponding 95% confidence bounds.

The linear fit for the data is not very indicative of the trend of the data. With an R^2 value of 0.58 and a margin of ± 340 inches per second for the 95% confidence bounds, it is clear that the distribution of air velocity exiting the nozzles is not best described by a linear regression. However, for the purpose of our project, the most important observation is that no ballast was displaced from between the tracks in spite of the high velocity at the inner edge of the two nozzles, which are pointed at the center of the track.

E. Force to actuate any mechanisms remains under 20 pounds

We did not include any mechanisms in our blower system design. The thing that most resembles a mechanism in our design is the pull-start for the Stihl leaf blower, and given Swanton Pacific Railroad's history of using Stihl power tools, we assumed the volunteers can successfully actuate the pull-start for a leaf blower.

F. Nozzle-track clearance

Given the relative fragility of the nozzles compared to the more robust components of our design, the purpose of this test was to determine if the nozzles are safe from harm. The validation criterion was a minimum 0.5-inch vertical clearance with the track and ballast. We tested this while visiting the ranch by assembling the shelf, mounting the front ducting to the shelf, and measuring the clearance with a tape measure. This test was successful with a clearance of 1.5 inches, and the clearance is shown in Figure 54.

Figure 54. Nozzle track clearance test.

However, the shelf interface did not rest perfectly flat on the existing cart's shelf. We measured the distance to be 0.9 inches of vertical displacement, which leaves us with a satisfactory 0.6-inch nozzle-track clearance. See Figure 55.

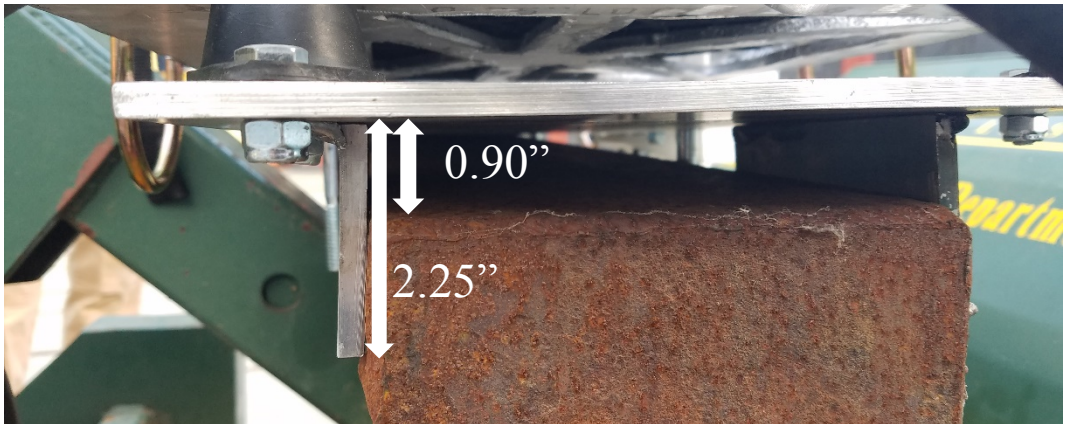

Figure 55. Factoring for the shelf displacement, the actual nozzle clearance we measured is 0.6 inches.

With a measured clearance of 0.6 inches, our system passes the nozzle track clearance test.

VIII. DESIGN CHANGES AND FINAL PRODUCT

During the project, there were some changes made to our original design. Some of these were due do external influences, others due to manufacturing errors, and some were improvements to the overall design after a first build and assembly.

A. Ratchet Strap

Some of the issues were out of our control. For example, the original design intended for the user to make use of ratchet straps hooked to tie-down rings to secure each leaf blower in place. The ratchet straps were ordered and then set aside once received until manufacturing had been finished. When we finally did open them, they were not usable. Normally ratchet straps are manufactured such that your long end is adjustable to give the user more freedom in strapping an item down. This was also the case in the product photo on McMaster. When they were opened, however, this was not the case. We had ordered 6-foot ratchet straps and, after opening the package, found that only about 1.5 feet could be used to adjust the size. Because of this they were unusable, so we had to replace those straps. It was decided to buy cambuckles, which were ultimately a better choice for two reasons. First, they were much more adjustable length-wise than any of the ratchet straps available. Second, a cambuckle would be able to properly secure the leaf blower without the danger of overtightening and damaging the leaf blower.

B. Rear Ducting Assembly

We also had to design around something that happened with the cart. The original design called for a short length of rigid ducting to be laid underneath the cart on which the hydraulic reservoir and control system are mounted (for part of the rear ducting assembly). Unfortunately, it was a close fit to begin with, and in between our measurements being taken and the completed ducting assembly being test-fit to the cart, the wheels supporting the cart had gone flat. It was enough that we couldn't run the small section of rigid ducting underneath as originally thought. We decided to swap that piece of rigid ducting for a length of our flexible ducting which would fit in the space needed and allow for the cart's wheels to continue going flat if that issue remains unaddressed (we think it's a reoccurring issue).

C. Blower Base Assembly

Unfortunately, some of the changes that needed to be made were because of our own mistakes. The most noticeable is on our blower base assembly. The design had intended for the walls enclosing the leaf blower to meet at the 45 degree cuts to make a complete, clean-looking box. Two issues during design and manufacturing prevented that clean connection and caused a small amount of the walls to overhang the base. The first is that when dimensioning the leaf blower, there were errors made and certain contours were not noticed and accounted for. This resulted in two opposite walls coming up short when boxing in the leaf blower and leaving a gap at each of the corners. The second issue was that when plasma cutting the base for the blower assemblies, our design didn't account for such a large diameter cutting flame. Because of this, the plates were cut about an 1/8 inches too small on all the sides. Because of how we had designed the leaf blower base assembly, this undercut resulted two of the walls overhanging by a small amount on either side of the base plate. While this issue had no effect functionally, it did change the aesthetic intended for the assembly.

D. Shelf Interface Assembly

Another issue was made evident during our trip to Swanton Ranch to check the fit of our components on the cart. The shelf interface, intended to be the intermediary surface between the leaf blower bases and the existing steel shelf of the cart, was designed with four plates to locate the shelf interface on the cart's shelf. When we attempted to put the shelf interface onto the shelf, the plates were too close together and wouldn't allow the shelf interface to sit flush. What we found was that when taking measurements of the cart, we missed some weld beads on the cart's shelf because they were covered by the existing assembly that was in use. After taking a hammer to two of the plates (the welds had been done incorrectly and were weak), they were re-welded at a new distance to account for the weld beads.

E. Safety Block

There were some design choices that were made after machining, assembling, and testing. The first regards the safety block. This part was intended to screw down on top of the foothold of the leaf blower and better secure it in place. What we found was that when attempting to put the leaf blower into the blower base, it was much too difficult to fit the leaf blower and safety block into the same space at the same time. There was danger of pinching and some damage to the surface of the blower (aesthetic only) that was induced each time this was attempted. As a result, the part

was removed for the final product. During testing, we found that the system was safely functional without the part and could be properly secured using only the cambuckle thanks in part due to the suspension bed built into the leaf blower.

F. Front Ducting Clamp

The clamp used to secure the front ducting assembly in place was also changed. Originally it was designed with only two bolts used to tighten the part together and was intended to accommodate the unaltered ducting used in the assembly. During assembly, duct tape was used to seal gaps and better fasten a joint in that area. Because of that added diameter and the spiral support in the rigid ducting, the assembly was at a limit for the diameter it could accommodate. Additionally, we saw that the two bolts used to tighten the assembly caused the parts to be tightened together at an odd angle, putting unnecessary stress on the 3D printed part. The redesign (seen in Appendix S) used four bolts rather than two to secure the ducting (to better distribute the forces) and increased the diameter it can accommodate to account for the ducting's spiral support and the duct tape used at the joint.

G. Leaf Blower Attachment Interface

Finally, we had some small changes that needed to be made to properly adapt the ducting assemblies to the leaf blower outlet. The rigid ducting was not able to be fitted properly to the outlet and so it needed to be crimped to properly fit. Because of how the leaf blower sits, a small piece of crimped ducting was attached the rest of the assembly via a length of flexible ducting. This crimped ducting is pressed firmly into the rotating elbow of the leaf blower and a padded hose clamp is tightened down around the rotating elbow.

H. Final Product

The final product has been painted and assembled. The blower base assemblies mounted to the shelf interface assembly can been seen in Figure 56 and the final printed ducting clamp in Figure 57. The total cost breakdown can be seen in Appendix V, our final total spend being $1911. The User's Manual with safety concerns addressed can be found in Appendix W.

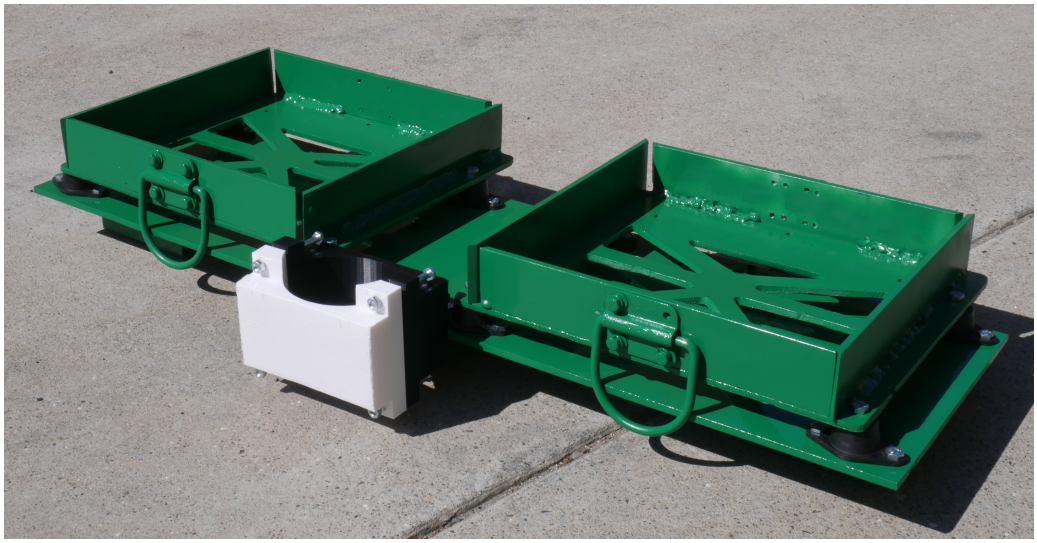

Figure 56. Final iteration of blower base assemblies mounted to shelf interface assembly.

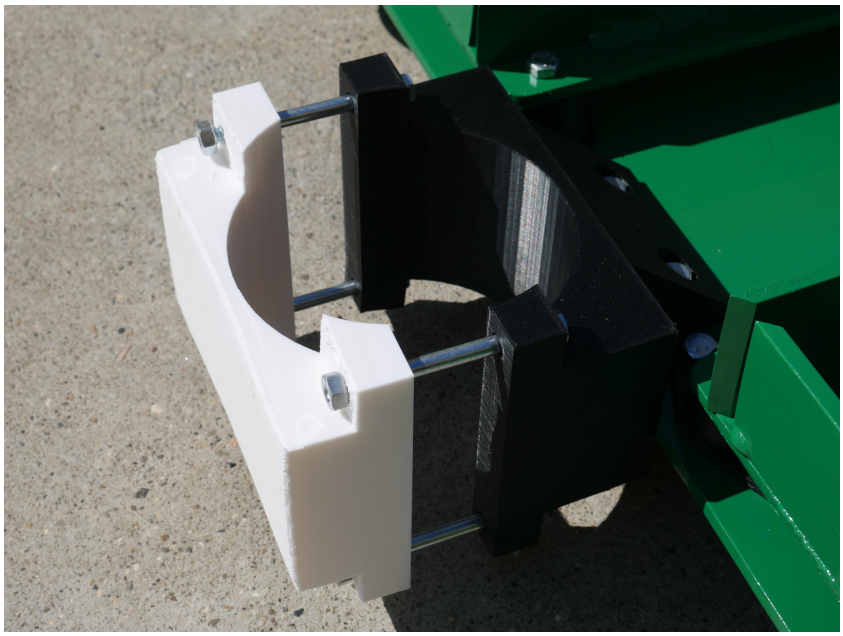

Figure 57. Final 3D-printed ducting clamp.

IX. MANAGEMENT PLAN

The name of our team shall be Track B&B. The B's stand for "brush" and "blow," in recognition of the purpose of the track maintainer we will be upgrading. Our team consists of two members, Jakob Graf and Dustin Platt, both fourth-year mechanical engineering students at California Polytechnic State University. We began the year with a third member, Alec Boyer, a fourth-year computer engineering student, who elected to join a different senior project team when making the track maintainer autonomous was eliminated from the scope of this project.

Governing our project team is a Team Contract which outlines our roles and responsibilities [Appendix T]. Holding the position of Communications Officer is Dustin. This role involves being the primary contact with our sponsor and facilitating meetings with them, as well as being the primary contact with the volunteers at Swanton Pacific Railroad. Holding the position of Team Treasurer is Jakob. This role involves recording expenses for our project, which must aim to be in the range of $2500 given to us by our sponsor, and include material/component and travel expenses. The Secretary/Recorder job is a joint-effort for both team members. It involves maintaining an organized Google Drive, which is our archive for project-related information.

Consistent communication will be required to deliver a successful product. Text messaging will be the preferred method for interaction between team members, due to its immediacy and accessibility. Email will be our primary method of communication with our sponsor, Dr. Crabb, and with volunteers at Swanton Pacific Railroad. This will be beneficial for planning travel dates and other meetings ahead of time. We also plan on meeting with our sponsor face-to-face on a regular basis (two meetings per month), ensuring that both parties are on the same page. We have already traveled to Santa Cruz to meet directly with the volunteers, our secondary customer.

We have completed a Gantt chart to fully describe our process, including small steps, large steps, and milestones [Appendix U]. Major milestones for our project already have specific dates. We completed the Project Proposal and sent it to our sponsor on October 25th of 2016. The Project Proposal outlined the scope of our project. The Preliminary Design Review (PDR) was delivered in two parts. We submitted the PDR Report on November 17th of 2016, which documented our concept generation procedure and selected concept. The second part was a design review with our sponsor, who approved of our concept and advised us to proceed with our design. The similar

Critical Design Review (CDR) will be on February 7th of 2017. This will also be delivered in two parts, one in report form and the second as a presentation.

Moving forward with the project, we anticipate manufacturing will finish May 2nd of 2017, when we will demonstrate the functionality of our hardware. During and after the manufacturing stage, we will conduct tests to confirm engineering specifications are met. The Senior Project Exposition is when we must deliver a presentation about our entire design process, and it will occur on June 2nd of 2017.

X. REFERENCES

[1] Bowen, Pascoe, Domonic Pitigliano, Mike Saltzman, Nathan Stewart, Scott Stiles, and Rich Wolfe. Sweeping Fever. Rep. Santa Cruz: Swanton Pacific Ranch, n.d. Print.

[2] N.p.: n.p., n.d. 7.5A Electric Blower. WORX, 2014. Web. 24 Oct. 2016. <https://cdn.worx.com/media/wysiwyg/wg506-owners-manual.pdf>.

[3] "DEWALT-DCBL590X1." Acme Tools. DEWALT, n.d. Web. 24 Oct. 2016.

[4] "Husqvarna 350BT 50cc 2-Cycle Backpack Blower." Leaf Blowers Direct. Power Equipment Direct, n.d. Web. 25 Oct. 2016. <http://www.leafblowersdirect.com/Husqvarna-350BT-Leaf-Blower/p4492.html>.

[5] "HP - High Performance Shoulder Ballast Cleaner." Loram, 2005. Web. 24 Oct. 2016. <http://www.loram.com/uploadedFiles/Services/Ballast_Cleaning/FINAL_SBC.pdf>.

[6] Conway, Ronald K., and Donald C. Bailey. Railcar Track Cleaning System. Carolina Equipment & Supply Company, Inc., assignee. Patent 6,148,732. 30 Sept. 1998. Web. 19 Jan. 2017. <http://patft.uspto.gov/netacgi/nph-Parser?Sect2=PTO1&Sect2=HITOFF&p=1&u=/netahtml/PTO/search-bool.html&r=1&f=G&l=50&d=PALL&RefSrch=yes&Query=PN/6148732>.

[7] "Bearing Contamination from Water & Debris | Know Your Parts." *Know Your Parts*. SKF, n.d. Web. 16 Nov. 2016. <http://www.knowyourparts.com/technical-articles/bearing-contamination-from-water-and-debri/>.

[8] Buffalo Forge Company: Fan, Blowers, Accessories. 15 Oct. 1936. Buffalo Forge product catalog. Buffalo, New York.

[9] Stihl. (2017). *STIHL BR 700: Instruction Manual*.

[10] Munson, Bruce R., Donald F. Young, and T. H. Okiishi, 1998. "Fundamentals of Fluid Mechanics," Wiley, New York, NY, pp. 510.

XI. APPENDICES

[Appendix A] QFD

[Appendix B] Pressure Data

[Appendix C] Decision Matrices

[Appendix D] Concept Sketches

[Appendix E] Fan Sizing Prediction

[Appendix F] Buffalo Forge Product Catalog Excerpt

[Appendix G] Motor Power Estimation

[Appendix H] Nozzle Flowrate Continuity Calculation

[Appendix I] Safety Checklist

[Appendix J] Parts / Drawing Hierarchy

[Appendix K] Drawings

[Appendix L] Manufacturing Details

[Appendix M] Final Nozzle Continuity Calculations

[Appendix N] Ducting Minor Loss Calculation

[Appendix O] Bill of Materials

[Appendix P] Design Verification Plan

[Appendix Q] Nozzle Velocity Test Procedures

[Appendix R] Raw Pressure Measurement Data & Velocity Calculations

[Appendix S] Revised Ducting Clamp Drawing

[Appendix T] Team Contract

[Appendix U] Gantt Chart

[Appendix V] Expense Breakdown

[Appendix W] User's Manual

Appendix A

QFD: House of Quality
Project: Track B&B
Revision: 2
Date: 10/18/16

Correlations	
Positive	+
Negative	–
No Correlation	

Relationships	
Strong	●
Moderate	○
Weak	▽

Direction of Improvement	
Maximize	▲
Target	◇
Minimize	▼

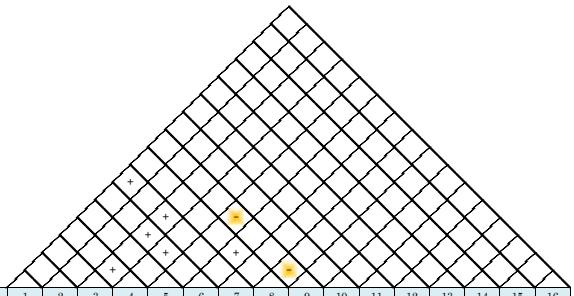

| | | WHO: Customers | | |

ENGINEERING DATA SHEET	Sheet No.	1 / 1	Date
Appendix B: Measured Pressures and Calculated Flowrates/Velocities	Prepared		
	Checked		
	Approved		

GEOMETRIC DIMENSIONS				
	Fan Exit	Reducer	Ducting	Bellows
Diameter (in)	5.1	4	4	--
Area (in^2)	20.4	12.6	12.6	--

PRESSURE DIFFERENTIALS AND VELOCITIES				
	Fan Exit	Reducer	Ducting	Bellows
Differential at Exit (inH20)	0.5	--	0.8	0.4
Differential at 1" from Exit (inH20)	--	1.07	0.6	--
Differential at 4" from Exit (inH20)	0.3	--	0.3	--
Differntial at Track (inH20)	--	--	--	0.15
Velocity at Exit (in/s)	561	--	710	502
Velocity at 1" (in/s)	--	821	615	--
Velocity at 4" (in/s)	435	--	435	--
Velocity at Track (in/s)	--	--	--	307
Flowrate at Exit (cfm)	398	--	310	--
Flowrate at 1" (cfm)	--	358	268	--
Flowrate at 4" (cfm)	308	--	190	--
Flowrate at Track (cfm)	--	--	--	--

Table C.1 Pugh Matrix for Linear Movement Locking

Concept / Criteria	Pin-based lock	Ubrella-spirng	Magnets	Blocks inhibiting movement	nerf gun/pen lcok	twist lock
Safe adjustment for the exit duct during operation	**S**	**D**	+	**S**	+	+
Easier way to reposition the lateral blower system position	**S**		-	**S**	+	+
Reduced amount of time to clean the length of track	**S**		**S**	-	**S**	**S**
Redistribute airflow to clear more debris with each pass	**S**	**A**	**S**	**S**	**S**	**S**
Functions can be operated by older volunteers	**S**		+	-	**S**	+
Systems are weather resistant/protected	**S**		+	+	-	-
Airflow cannot blow ballast over rails	**S**	**T**	**S**	**S**	**S**	**S**
Lock moving parts in place when in operation	**S**		**S**	-	**S**	**S**
1500 psi hydraulic motor	**S**		**S**	**S**	**S**	**S**
Cost remains under $2500	**S**	**U**	**S**	**S**	**S**	**S**
Σ+	0		3	1	2	3
Σ -	0		1	3	1	1
ΣS	10	**M**	6	6	7	6

Table C.2 Pugh Matrix for Linear Actuation

Concept / Criteria	Push fan as it rests on surface	Single linear rail support	Multiple linear rail supports	Drawer tracks	Lead Screw
Safe adjustment for the exit duct during operation	**D**	**S**	**S**	**S**	**S**
Easier way to reposition the lateral blower system position		+	+	+	+
Reduced amount of time to clean the length of track		**S**	**S**	**S**	**S**
Redistribute airflow to clear more debris with each pass	**A**	**S**	**S**	**S**	**S**
Functions can be operated by older volunteers		+	+	+	**S**
Systems are weather resistant/protected		**S**	**S**	**S**	**S**
Airflow cannot blow ballast over rails	**T**	**S**	**S**	**S**	**S**
Lock moving parts in place when in operation		**S**	+	**S**	+
1500 psi hydraulic motor		**S**	**S**	**S**	**S**
Cost remains under $2500	**U**	**S**	**S**	**S**	**S**
Σ+		2	3	2	2
Σ -		0	0	0	0
ΣS	**M**	8	7	8	8

Table C.3 Pugh Matrix for Nozzle Design

Concept / Criteria	Cowcatcher	Angle Nozzles	Slats	Dual Nozzle	Fanned Nozzles	Current Nozzle
Safe adjustment for the exit duct during operation	+	+	+	**S**	+	**D**
Easier way to reposition the lateral blower system position	+	-	+	-	-	
Reduced amount of time to clean the length of track	+	+	+	**S**	+	
Redistribute airflow to clear more debris with each pass	+	+	+	+	+	**A**
Functions can be operated by older volunteers	**S**	**S**	**S**	**S**	**S**	
Systems are weather resistant/protected	-	**S**	-	**S**	**S**	
Airflow cannot blow ballast over rails	+	-	+	+	+	**T**
Lock moving parts in place when in operation	+	+	+	-	-	
1500 psi hydraulic motor	**S**	**S**	**S**	**S**	**S**	
Cost remains under $2500	-	-	-	**S**	-	**U**
Σ+	6	4	6	2	4	
Σ -	2	3	2	2	3	
ΣS	2	3	2	6	3	**M**

Table C.4 Weighted Decision Matrix

		Engineering Specifications									Total
		Safe distance (min 1ft)	Actuation Force (max 20lb)	# of passes (max 2)	Operation time (max 90 min)	# unprotected components (0)	Flowrate (optimal)	Track spacing (interfaces)	Hydraulic pressure (interfaces)	Cost (max $2500)	
	Weight [%]	9%	12%	13%	12%	14%	9%	6%	11%	14%	100%
Mounted Leaf Blower	Rating	10	10	10	10	8	10	10	10	10	--
	Weighted Rating	0.9	1.2	1.3	1.2	1.12	0.9	0.6	1.1	1.4	9.72
Linear Rails -- Pin Lock	Rating	10	10	8	8	5	6	10	10	10	--
	Weighted Rating	0.9	1.2	1.04	0.96	0.7	0.54	0.6	1.1	1.4	8.44
Linear Rails -- Twist Lock, Block	Rating	10	10	8	8	6	6	10	10	10	--
	Weighted Rating	0.9	1.2	1.04	0.96	0.84	0.54	0.6	1.1	1.4	8.58
Drawer Tracks -- Pin Lock	Rating	10	10	8	8	4	6	10	10	10	--
	Weighted Rating	0.9	1.2	1.04	0.96	0.56	0.54	0.6	1.1	1.4	8.3
Drawer Tracks -- Twist Lock, Block	Rating	10	10	8	8	5	6	10	10	10	--
	Weighted Rating	0.9	1.2	1.04	0.96	0.7	0.54	0.6	1.1	1.4	8.44

ENGINEERING DATA SHEET	Sheet No. 1 / 2		Date
Appendix D: Concept Sketches	Prepared		
	Checked		
	Approved		

Figure D.1 Drawer track movement with pin-based locking mechanism (side view).

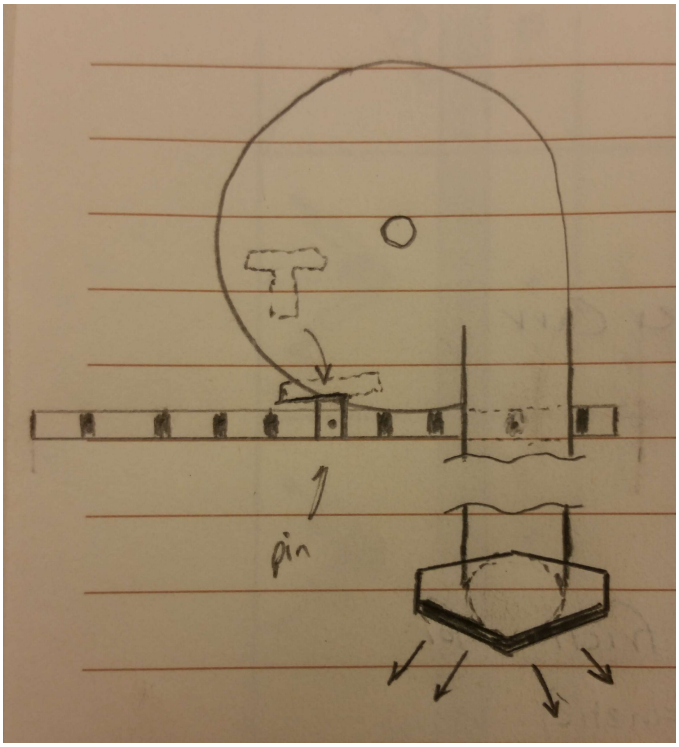

Figure D.2 Drawer track movement with pin-based locking mechanism (top view).

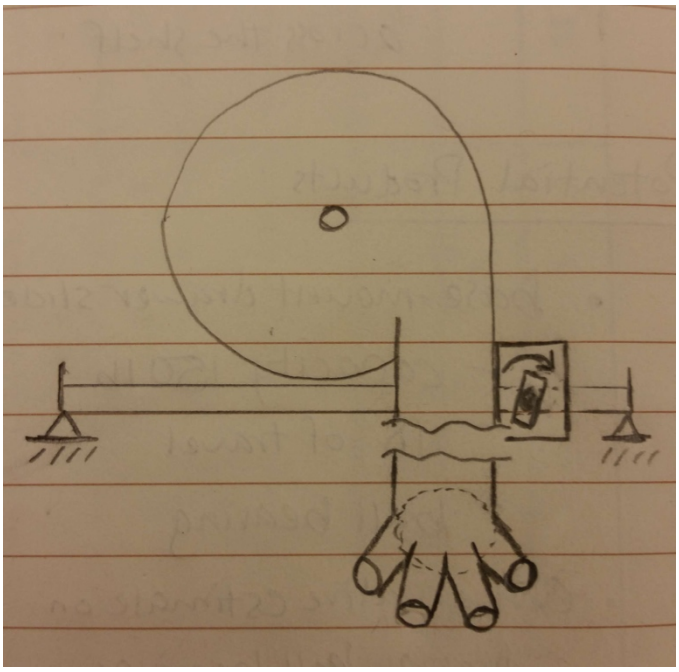

Figure D.3 Linear rail movement with a screw-tightened block locking system (side view).

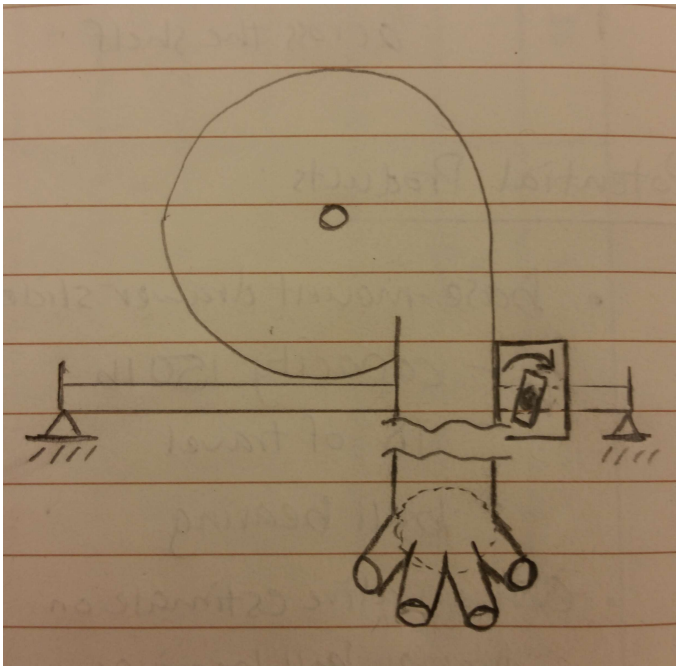

Figure D.4 Linear rail movement with a screw-tightened block locking system (top view).

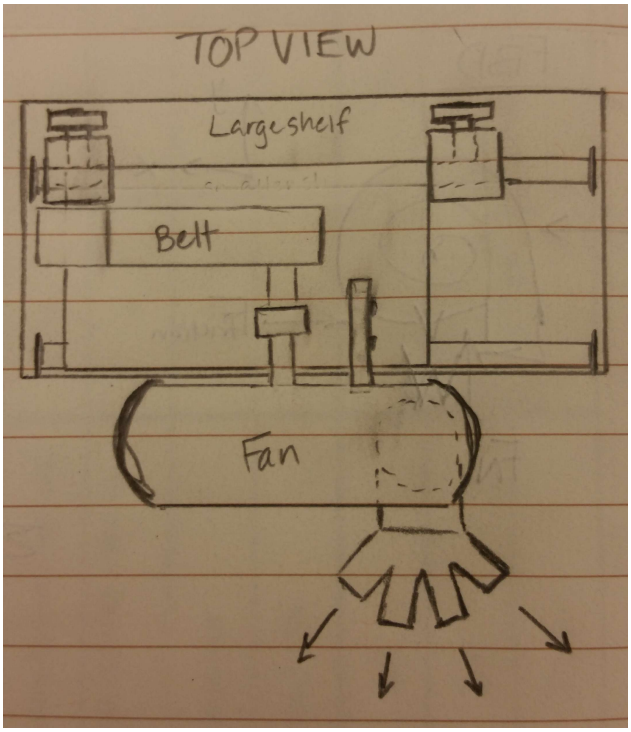

APPENDIX E — FAN SIZING PREDICTION

THESE CALCULATIONS WERE PERFORMED USING RELATIONSHIPS DEVELOPED FROM DATA PROVIDED IN BUFFALO FORGE PRODUCT GUIDE [APPENDIX F].

WE ARE ASSUMING THAT THE APPROXIMATE RELATIONSHIPS DERIVED REMAIN ACCURATE FOR THE PURPOSES OF SCALING.

WE ARE ALSO ASSUMING THAT THE FAN BLADE WIDTH IS BEING SCALED TO 6" AND THE LARGER FAN SCALES THE SAME.

THE OPERATING SPEED FOR THESE RELATIONSHIPS IS 3400 RPM, HOWEVER BECAUSE OF THE DIFFICULTY SCALING SPEEDS (DUE TO NONUNIFORM FAN SCALING), ANY TREND OBSERVED WILL BE ASSUMED TO BE CONSISTANT WITH OUR OPERATING SPEED OF ABOUT 1200 RPM.

FIRST, WE CAN LOOSLY PREDICT THE SLOPE AND Y-INTERCEPT OF AN APPROXIMATE LINEAR RELATIONSHIP BETWEEN POWER (P) AND CAPACITY ($\dot{V}$)

$$\text{FOR: } P \tilde{=} A_1 \dot{V} + A_2$$

$$A_1 \tilde{=} 0.00044 \ln(B) + 0.00030$$

$$A_2 \tilde{=} 0.0203 B^2 - 0.0865 B + 0.132$$

WHERE B = BLADE WIDTH

$$\begin{cases} A_1(4.5_{in}) \tilde{=} 0.00044 \ln(4.5) + 0.00030 \\ \qquad \tilde{=} 0.00096 \ hp/(ft^3/min) \\ A_1(6_{in}) \tilde{=} 0.00109 \ hp/(ft^3/min) \end{cases}$$

$$\begin{cases} A_2(4.5) \tilde{=} 0.0203(4.5)^2 - 0.0865(4.5) + 0.132 \\ \qquad \tilde{=} 0.1538 \ hp \\ A_2(6_{in}) \tilde{=} 0.3438 hp \end{cases}$$

$$\begin{cases} \text{FOR } B = 4.5_{IN} \longrightarrow P \tilde{=} (0.00096 \ hp/(ft^3/min)) \dot{V} + 0.1538 \ hp \\ \text{FOR } B = 6_{IN} \longrightarrow P \tilde{=} (0.00109 \ hp/(ft^3/min)) \dot{V} + 0.3438 \ hp \end{cases}$$

USING THESE SCALED RELATIONSHIPS, AT 3400 rpm AND OPERATING CAPACITY OF $\approx 400\ in^3/min$:

$$P_{4.5IN}(400\ in^3/min) \cong 0.539\ hp$$
$$P_{6IN}(400\ in^3/min) \cong 0.779\ hp$$

TO OPERATE AT THE SAME CAPACITY, WE NEED ABOUT 1.44x THE POWER WHEN SCALING FROM 4.5 IN TO 6 IN. OUR FAN IS ONLY BEING SUPPLIED ABOUT 0.1 hp AT LESS THAN 1200 rpm. TO STEP UP THE POWER WOULD REQUIRE EITHER AN INCREASE IN SPEED OR TORQUE. OUR MOTOR, HOWEVER, IS ALREADY OPERATING AT THE PUMP'S MAXIMUM CAPACITY.

ANY INCREASE IN FAN SIZE WOULD DECREASE THE CAPACITY. IT ISN'T RECOMMENDED TO INCREASE THE FAN SIZE BECAUSE CAPACITY CANNOT BE SACRAFICED.

ENGINEERING DATA SHEET	Sheet No. 1 / 1	Date
Appendix F: Buffalo Forge Product Catalog Excerpt	Prepared	
	Checked	
	Approved	

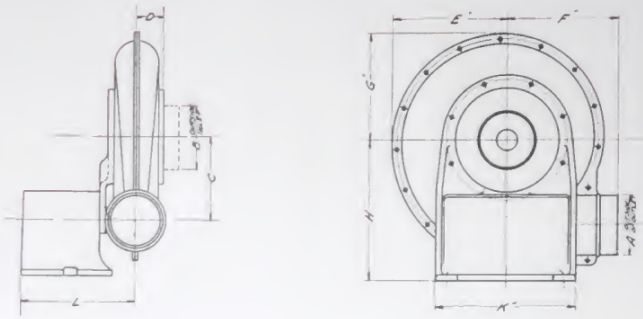

Size	H.P. Motor	A	B	C	D	E	F	G	H	K	L	M
2-E	1/30	3	3	5⅛	1½	6¾	6	6⅜	8⅜	8⅜	9⅛	.....
2-EH	1/8	3	3	5⅛	1½	6¾	6	6⅜	8⅜	8⅜	9⅛	.....
3-E	1/4	4	4	6	1¾	7⅞	7⅜	7¼	9½	8¾	9⅛	.....
4-E	1/2	4½	5	7¾	1⅞	9⅞	8⅞	9⅛	10⅞	13	11½	.....
4½-E	*	5	5½	7¼	2 3/16	9⅞	9½	9⅛	12	14¾	10	13
5-E	*	5½	6⅜	10½	2 11/16	13⅛	12	12¼	15	12	11⅜	14 11/16
5½-E	*	7	7⅜	12¼	3 7/16	15 13/16	13¾	14⅞	17½	19	16¼	20
6-E	*	7¼	8	13⅜	3⅜	17¼	15	16¼	19	19	16⅜	21

* H.P. for the larger sizes depends on capacities and pressures.

Multi-Rating Tables

Type "FB" Blowers

Capacities and Statistic Pressures at 70° F and 29.92" Bar.

Nos. 2-E, 2-EH, 3-E and 4-E

No. 2-E BLOWER 1750 R. P. M. INCHES			
Cap.	Static	Total	H.P.
0	.9	.9	.0065
30	.821	.843	.0102
50	.730	.790	.0143
70	.593	.728	.0180
110	.0	.422	.0270

No. 2-EH BLOWER 3400 R. P. M. INCHES			
Cap.	Static	Total	H.P.
0	3.40	3.40	.043
30	3.25	3.30	.058
60	3.09	3.17	.075
100	2.75	2.98	.104
150	2.07	2.64	.136
208	1.26	2.21	.163
250	.00	1.50	.201

No. 3-E BLOWER 3400 R. P. M. INCHES			
Cap.	Static	Total	H.P.
0	4.30	4.30	.075
45	4.33	4.37	.092
90	4.29	4.37	.121
150	4.01	4.21	.172
225	3.27	3.74	.248
285	2.46	3.22	.306
315	2.05	2.94	.331
360	1.30	2.51	.363
390	0.78	2.20	.380

No. 4-E BLOWER 3400 R. P. M. INCHES			
Cap.	Static	Total	H.P.
0	4.68	4.68	.133
90	4.60	4.65	.183
180	4.45	4.57	.247
300	4.00	4.31	.356
450	2.72	3.43	.497
570	1.20	2.40	.608
646	.00	1.60	.678

Buffalo Forge Company

Buffalo, New York

IN CANADA: CANADIAN BLOWER and FORGE CO., LTD., KITCHENER, ONT.

Form A 2386-3560-11-38

MOTOR POWER ESTIMATION

THE CURRENT MOTOR USED IS AN OLD ROLLER STATOR Ø1" HYDRAULIC MOTOR. A SKETCH CAN BE SEEN BELOW FOR REFERENCE.

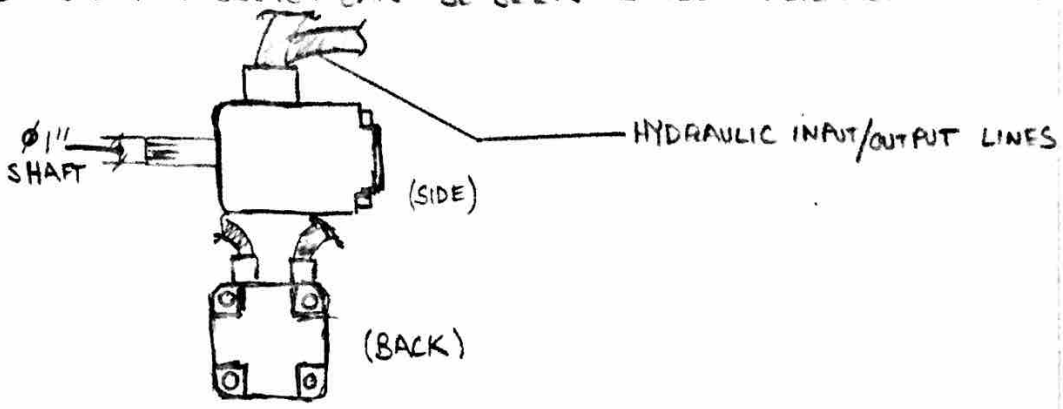

AFTER CORRESPONDACE WITH WHITE HYDRAULICS (FORMALLY ROLLER STATOR), WE WERE GIVEN THE FOLLOWING CONSTANTS FOR THIS 1979-ERA MOTOR:

$K_{TORQUE} \cong 0.45 \ \text{IN-lbf/psi}$

$K_{SPEED} \cong 75 \ \text{RPM/gpm}$

MOTOR DISPLACEMENT = 3IN^3

ACCORDING TO THE BRAE TECHNICAL DOCUMENT, THE EXISTING PUMP OPERATES AT:

$\dot{V} = 8 \ \text{gpm}$

$P = 1500 \ \text{psi}$

ASSUMING NO LOSSES IN THE HYDRAULIC SYSTEM TRANSFERRING POWER, OUR MOTOR OPERATES AT:

$$T = K_{TORQUE} P = (0.45 \ \text{IN-lbf/psi})(1500 \ \text{psi})$$

$$\underline{\underline{T = 675 \ \text{IN-lbf}}} \longrightarrow \text{THIS TORQUE IS CONSTANT BECAUSE THE MOTOR DISPLACEMENT IS CONSTANT ALONG WITH OPERATING PRESSURE.}$$

$$\omega = K_{SPEED} \dot{V} = (75 \ \text{RPM/gpm})(8 \ \text{gpm})$$

$$\underline{\underline{\omega = 600 \ \text{rpm}}} \longrightarrow \text{CAN BE VARIED WITH FLORATE TO CHANGE POWER OUTPUT}$$

THERE IS A PULLEY REDUCTION IN THE BELT SYSTEM, HOWEVER THIS WON'T AFFECT THE POWER SUPPLIED ASSUMING NO LOSSES. POWER IS GIVEN BY:

$$P_{SHAFT} = T\omega$$

$$= (675\ \text{in-lbf})(600\ \text{rev/min})\left(\frac{1\ \text{ft}}{12\ \text{in}}\right)\left(\frac{1\ \text{min}}{60\ \text{sec}}\right)\left(\frac{2\pi\ \text{rad}}{1\ \text{rev}}\right)$$

$$P_{SHAFT} = \left(3534\ \text{ft-lbf/sec}\right)\left(\frac{1\ \text{hp}}{33{,}000\ \text{ft-lbf/sec}}\right)$$

$$\underline{P_{SHAFT} = 0.107\ \text{hp}}$$

OUR MOTOR IS ONLY ABLE TO SUPPLY ABOUT 0.1 hp OF POWER TO THE BLOWER FAN. IF THE PULLY REDUCTION IS BY A FACTOR OF 2, THAT WOULD HAVE OUR FAN SPINNING AT LESS THAN 1200 rpm.

ENGINEERING DATA SHEET	Sheet No. 1 / 4	Date
Appendix H: Nozzle Flowrate Continuity Calculation	Prepared	
	Checked	
	Approved	

Figure H.1 Flowrate calculations for current blower fan. Continuity was used.

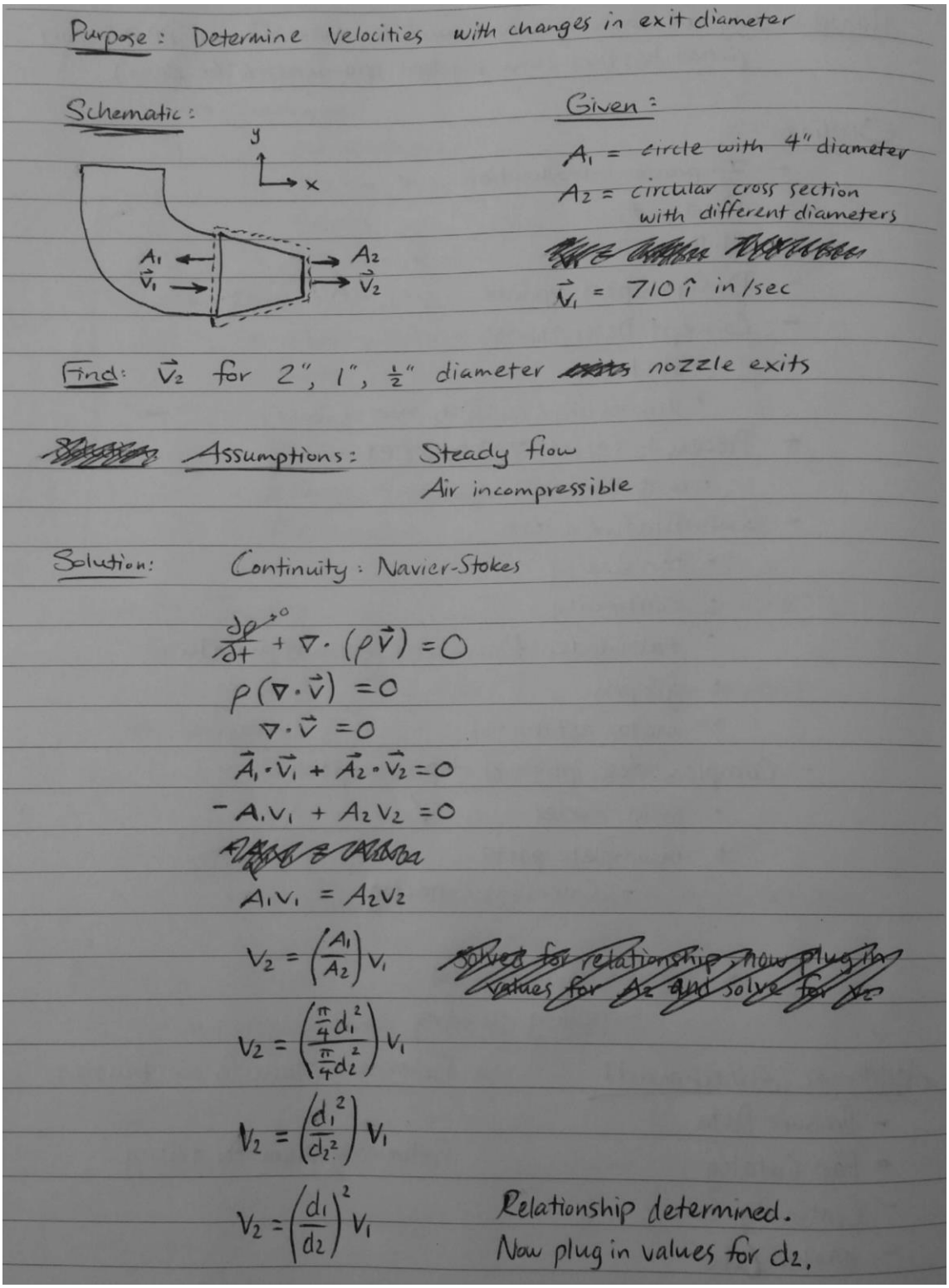

Figure H.1 Continued

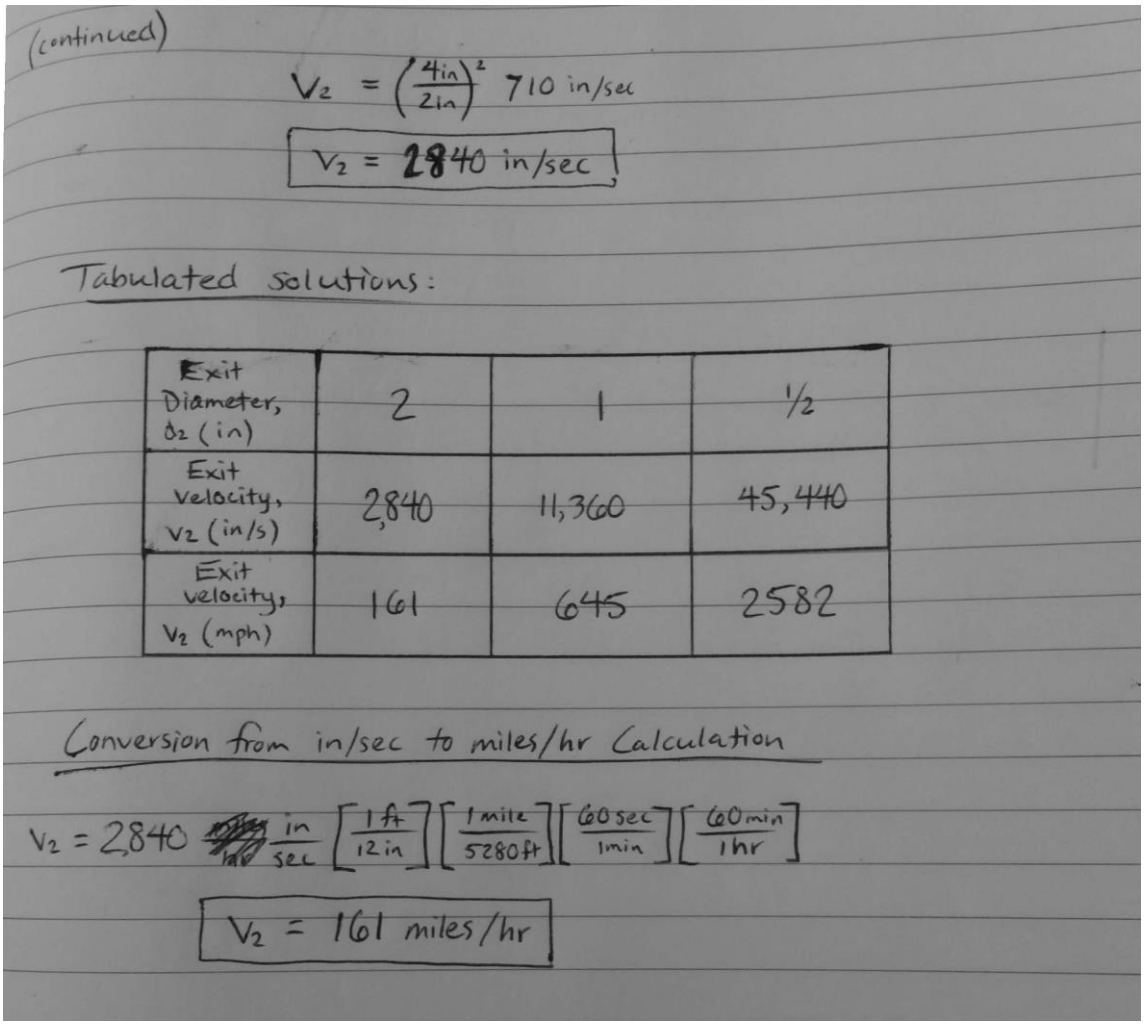

(continued)

$V_2 = \left(\frac{4in}{2in}\right)^2 710\ in/sec$

$V_2 = 2840\ in/sec$

Tabulated solutions:

Exit Diameter, D_2 (in)	2	1	½
Exit Velocity, V_2 (in/s)	2,840	11,360	45,440
Exit velocity, V_2 (mph)	161	645	2582

Conversion from in/sec to miles/hr Calculation

$V_2 = 2840\ \frac{in}{sec}\left[\frac{1\ ft}{12\ in}\right]\left[\frac{1\ mile}{5280\ ft}\right]\left[\frac{60\ sec}{1\ min}\right]\left[\frac{60\ min}{1\ hr}\right]$

$V_2 = 161\ miles/hr$

ENGINEERING DATA SHEET	Sheet No. 3 / 4		Date
Appendix H: Nozzle Continuity Calculation	Prepared		
	Checked		
	Approved		

Figure H.2 Continuity calculations (estimated) for Makita leaf blower output split two ways.

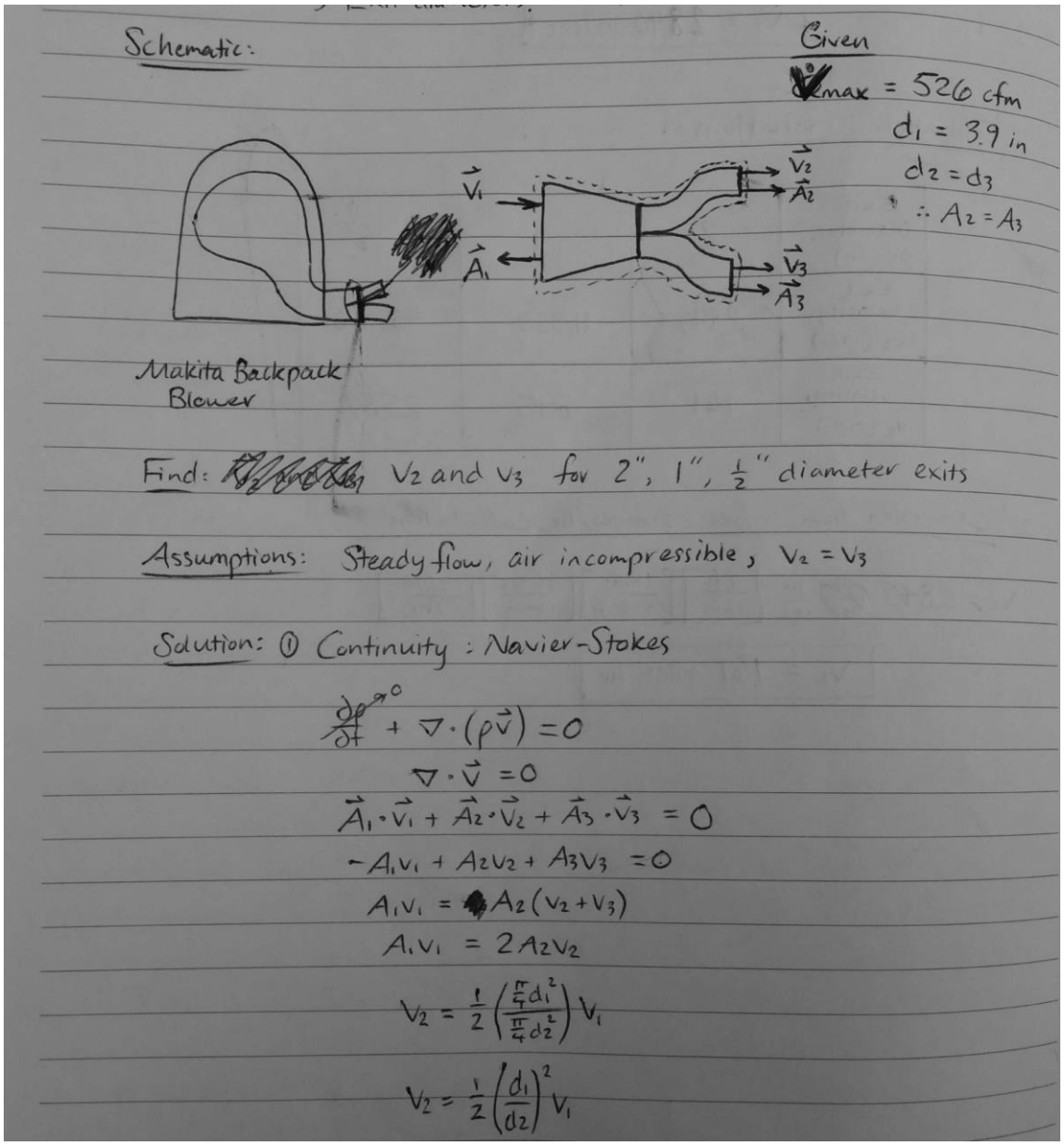

Figure H.2 Continued

Solution: (continued)

② $\dot{V} = Av$, Volumetric flow

$$V_1 = \frac{\dot{V}_{max}}{A_1}$$

$$V_1 = \frac{526\ ft^3/min}{\frac{\pi}{4}(3.9in)^2}\left[\frac{12in}{1ft}\right]^3\left[\frac{1min}{60sec}\right]$$

$$\boxed{V_1 = 1268\ in/s}$$

③ Plug in different diameters for d_2, solve for V_2

$$V_2 = \frac{1}{2}\left(\frac{3.9in}{2in}\right)^2 1268\ in/sec$$

$$\boxed{V_2 = 2410\ in/sec = V_3}$$

Tabulated Solutions

Exit Diameter, d_2 (in)	2	1	1/2
Exit Velocity, V_2 (in/s)	2410	9,640	38,570
Exit velocity, V_2 (mph)	137	548	2,190

APPENDIX I – SAFETY CHECKLIST

ME 428/429/430 Senior Design Project 2016-2017

DESIGN HAZARD CHECKLIST

Team: Track B&B (48) Advisor: Rossman

Y	N	
☐	☒	1. Will any part of the design create hazardous revolving, reciprocating, running, shearing, punching, pressing, squeezing, drawing, cutting, rolling, mixing or similar action, including pinch points and sheer points?
☐	☒	2. Can any part of the design undergo high accelerations/decelerations?
☐	☒	3. Will the system have any large moving masses or large forces?
☒	☐	4. Will the system produce a projectile?
☐	☒	5. Would it be possible for the system to fall under gravity creating injury?
☐	☒	6. Will a user be exposed to overhanging weights as part of the design?
☐	☒	7. Will the system have any sharp edges?
☐	☒	8. Will any part of the electrical systems not be grounded?
☐	☒	9. Will there be any large batteries or electrical voltage in the system above 40 V?
☒	☐	10. Will there be any stored energy in the system such as batteries, flywheels, hanging weights or pressurized fluids?
☐	☒	11. Will there be any explosive or flammable liquids, gases, or dust fuel as part of the system?
☐	☒	12. Will the user of the design be required to exert any abnormal effort or physical posture during the use of the design?
☐	☒	13. Will there be any materials known to be hazardous to humans involved in either the design or the manufacturing of the design?
☒	☐	14. Can the system generate high levels of noise?
☒	☐	15. Will the device/system be exposed to extreme environmental conditions such as fog, humidity, cold, high temperatures, etc?
☐	☒	16. Is it possible for the system to be used in an unsafe manner?
☐	☒	17. Will there be any other potential hazards not listed above? If yes, please explain on reverse.

For any "Y" responses, add (1) a complete description, (2) a list of corrective actions to be taken, and (3) date to be completed on the reverse side.

Figure 4: Design Hazard Checklist, Page 1

APPENDIX I – SAFETY CHECKLIST

Design Hazards & Safety Plans

Description of Hazard	Planned Corrective Action	Planned Date	Actual Date
1. Leaves & gravel blown by leaf blower might become projectiles	Team members communicate when device is being turned on. Warn each other and others not to stand in blowing direction during operation. Wear eye protection when operating.	1/14/2017	
2. Stored energy (pressurized fluid) will be on the track maintainer, but not used by upgraded blower system	Team members will advise operators to be aware of pressurized fluid location when operating blower system.	1/28/2017	
3. Stihl leaf blower generates 76 dB at 50 feet	Team members will wear ear protection (earplugs) when operating leaf blower. Team members will advise operators and nearby volunteers at Swanton Pacific Railroad to wear ear protection.	1/28/2017	
4. Upgraded blower system will be exposed to weather conditions typical to Santa Cruz mountains, including rain and wind	Team members will not operate leaf blower in rainy conditions. Team members will advise operators to avoid using leaf blower in rain.	1/14/2017	

APPENDIX J

PARTS / DRAWING HIERARCHY

NOTE: SEE MANUFACTURING DETAILS FOR PARTS THAT LIST A MANUFACTURING DETAL # (APPENDIX L)
NOTE: ALL DWG./PT. # HIGHLIGHTED HAVE CORRESPONDING DRAWINGS

LEVEL	NAME	UNITS	BOUGHT OR MANUFACTURED (B/M)	DWG./PT. #	WEIGHT (lb)	MANUFACTURING DETAIL #
0	TOTAL ASSEMBLY	1	---	1000	83.18	---
1	REAR DUCTING ASSEMBLY	1	---	1001-A	#REF!	---
1	FRONT DUCTING ASSEMBLY	1	---	1001-B		---
2	NOZZLE	2	M	2001	1.74	11
2	FITTING CONNECTORS	7	B	2002	0.42	---
	STRAIGHT DUCTING					
2	12 IN	4	M	2003	1.05	12
2	16 IN	1	M	2004	1.40	12
2	6 IN	2	M	2005	0.53	12
2	90 DEGREE ELBOW	7	B	2007	0.85	---
2	DAMPER	2	B	2026	0.14	---
2	TEE	4	B	2008	1.44	---
2	URATHANE FLEX DUCTING ELBOWS	2	B	2009		---
1	MOUNTED SHELF INTERFACE ASSEMBLY	1	---	1002	13.16	---
2	SHELF INTERFACE ASSEMBLY	1	M	2010 (A/B)	11.34	8
3	LOCATOR PLATES	4	M	3001	0.27	6
3	SHELF INTERFACE	1	M	3002	10.26	7
2	1/2"-20 X 3" ZINC-PLATED CAP SCREW	4	B	2011		---
2	1/2"-20 WING NUT	4	B	2012		---
2	MOUNTING STRIP	2	M	2013	0.91	9
2	VIBRATION MOUNTS	8	B	2014		---
2	5/16"-18 X .75" BOLT	16	B	2015		---

2	5/16"-18 OPEN-END CAP NUT	20	B	2016		---
2	5/16"-18 X 1.5" BOLT	16	B	2024		---
2	5/16"-18 X 2" Bolt	16	B	2025		---
2	VERTICAL PIPE MOUNT	1	M	2026		10
1	BLOWER BASE ASSEMBLY	2	---	1003	11.41	---
2	TIE-DOWN RIINGS	2	B	2018		---
2	5/16"-18 X .75" BOLT	3	B	2015		---
2	1/4"-20 X 3/8" BOLT	8	B	2019		---
2	AL SAFETY BLOCK	1	M	2020	5.25	5
2	BASE ASSEMBLY	1	---	2021 (A/B)	6.16	4
3	BASE PLATE	1	M	3003	3.42	1
3	SIDE WALL	2	M	3004	0.69	2
3	TIE-DOWN WALL	2	M	3005	0.68	3
1	5/16"-18 X .75" BOLT	8	B	2015		---
1	6' LONG, 2" WIDE RATCHET STRAP	2	B	2022		---
1	STIHL BR700 LEAF BLOWER	2	B	2023	23.6	---

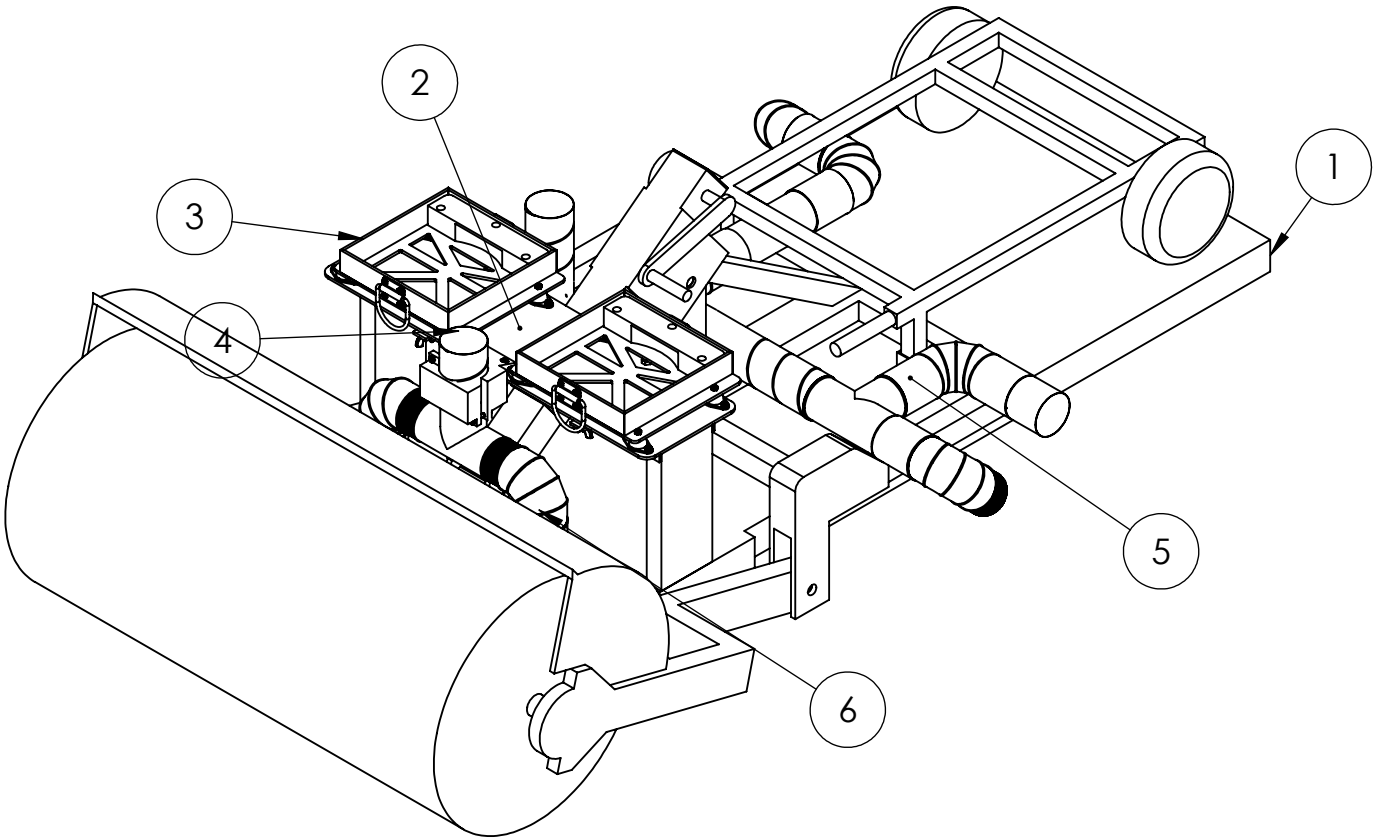

ITEM NO.	PART NO.	DESCRIPTION	QTY.
6	1001-B	FRONT DUCTING ASSEMBLY	1
5	1001-A	REAR DUCTING ASSEMBLY	1
4	2016	5/16"-18 X 3/4" BOLT	8
3	1003	BLOWER BASE ASSEMBLY	2
2	1002	Mounted Shelf Interface Assembly	1
1	--	EXISTING CART	1

SOLIDWORKS Educational Product. For Instructional Use Only

UNLESS OTHERWISE SPECIFIED:

DIMENSIONS ARE IN INCHES
TOLERANCES:
FRACTIONAL ±
ANGULAR: MACH ± BEND ±
ONE PLACE DECIMAL ±.1
TWO PLACE DECIMAL ±.01

INTERPRET GEOMETRIC TOLERANCING PER:

MATERIAL

FINISH

DO NOT SCALE DRAWING

	NAME	DATE
DRAWN	J.GRAF	2/5/17
CHECKED		
ENG APPR.		
MFG APPR.		
Q.A.		

COMMENTS:

TITLE:

TOTAL ASSEMBLY

SIZE	DWG. NO.	REV
A	1000	

SCALE: 1:24 WEIGHT: SHEET 1 OF 1

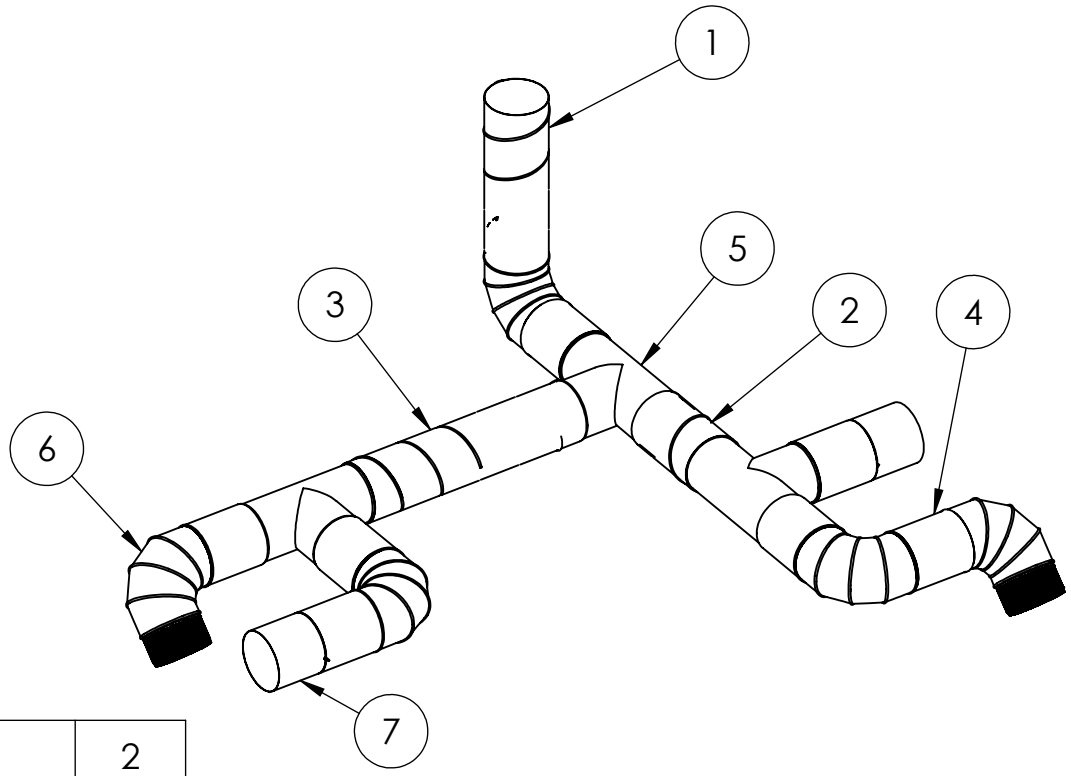

ITEM NO.	PART NO.	DESCRIPTION	QTY.
7	2024	DAMPER	2
6	2007	ELBOW	5
5	2008	TEE	3
4	2002	FITTING CONNECTOR	7
3	2004	16" STRAIGHT DUCT SECT.	1
2	2005	6" STRAIGHT DUCT SECT.	1
1	2003	12" STRAIGHT DUCT SECT.	1

SOLIDWORKS Educational Product. For Instructional Use Only

UNLESS OTHERWISE SPECIFIED:		NAME	DATE
DIMENSIONS ARE IN INCHES TOLERANCES: FRACTIONAL ± ANGULAR: MACH ± BEND ± TWO PLACE DECIMAL ± THREE PLACE DECIMAL ±	DRAWN	J.GRAF	2/5/17
	CHECKED		
	ENG APPR.		
	MFG APPR.		
INTERPRET GEOMETRIC TOLERANCING PER:	Q.A.		
MATERIAL	COMMENTS:		
FINISH			
DO NOT SCALE DRAWING			

TITLE:

REAR DUCTING ASSEMBLY

SIZE	DWG. NO.	REV
A	1001-A	

SCALE: 1:12 WEIGHT: SHEET 1 OF 1

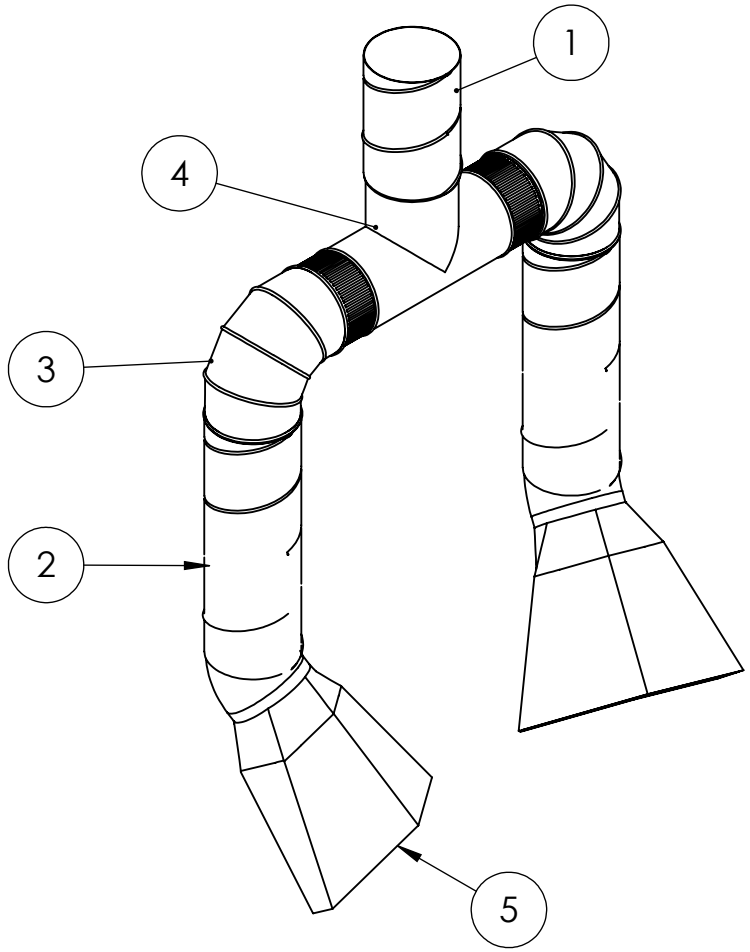

ITEM NO.	PART NUMBER	DESCRIPTION	QTY.
5	2001	NOZZLE	2
4	2008	TEE	1
3	2007	ELBOW	2
2	2003	12" STRAIGHT DUCT SECT.	2
1	2005	6" STRAIGHT DUCT SECT.	1

SOLIDWORKS Educational Product. For Instructional Use Only

UNLESS OTHERWISE SPECIFIED:		NAME	DATE
DIMENSIONS ARE IN INCHES TOLERANCES: FRACTIONAL ± ANGULAR: MACH ± BEND ± TWO PLACE DECIMAL ± THREE PLACE DECIMAL ±	DRAWN	J.GRAF	2/5/17
	CHECKED		
	ENG APPR.		
	MFG APPR.		
INTERPRET GEOMETRIC TOLERANCING PER:	Q.A.		
MATERIAL	COMMENTS:		
FINISH			
DO NOT SCALE DRAWING			

TITLE:

FRONT DUCT ASSEMBLY

SIZE	DWG. NO.	REV
A	1001-B	

SCALE: 1:8	WEIGHT:	SHEET 1 OF 1

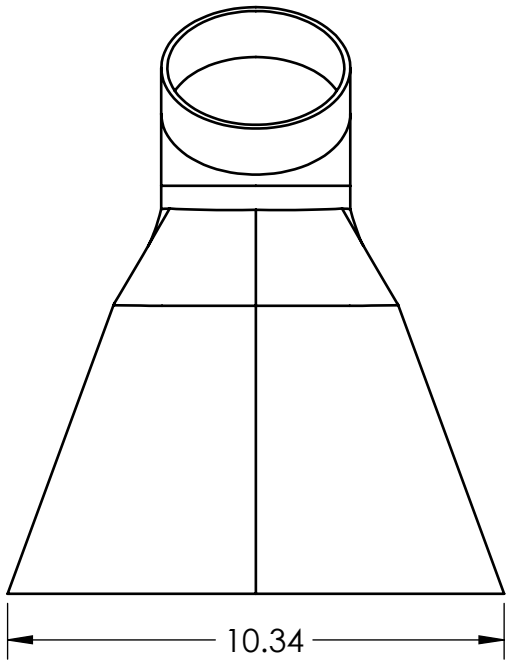

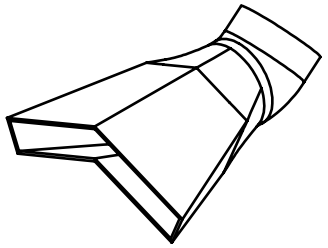

SCALE 1:8

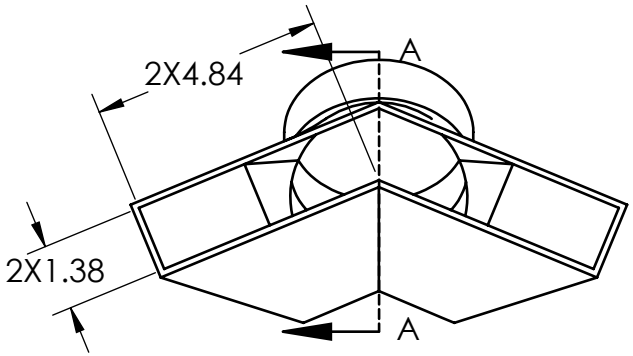

SECTION A-A

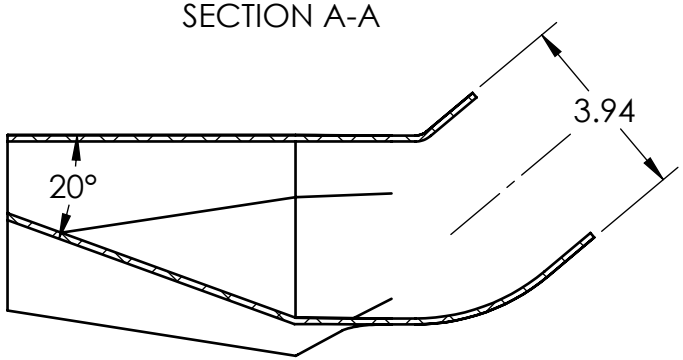

NOTES
1. ALL DIMS IN INCHES
2. WALL THICKNESS: 1/8" ALL SURFACES
3. PART WILL BE 3D-PRINTED IN 7 PIECES, AS SUCH DIMENSIONING IS NOT CRITICAL

SOLIDWORKS Educational Product. For Instructional Use Only

UNLESS OTHERWISE SPECIFIED:		NAME	DATE
DIMENSIONS ARE IN INCHES TOLERANCES: FRACTIONAL ± ANGLES: ±1° TWO PLACE DECIMAL ±.01 THREE PLACE DECIMAL ±.005	DRAWN	J. GRAF	1/29/17
	CHECKED		
	ENG APPR.		
	MFG APPR.		
INTERPRET GEOMETRIC TOLERANCING PER:	Q.A.		
MATERIAL 3D-PRINTED ABS	COMMENTS:		
FINISH			
DO NOT SCALE DRAWING			

TITLE:

NOZZLE

SIZE	DWG. NO.	REV
A	2001	

SCALE: 1:4	WEIGHT:	SHEET 1 OF 1

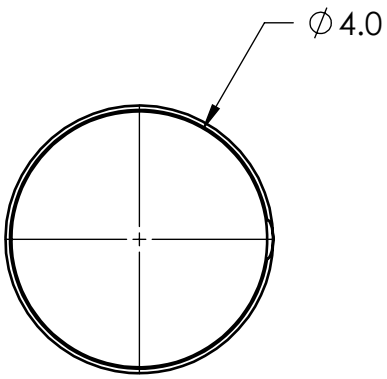

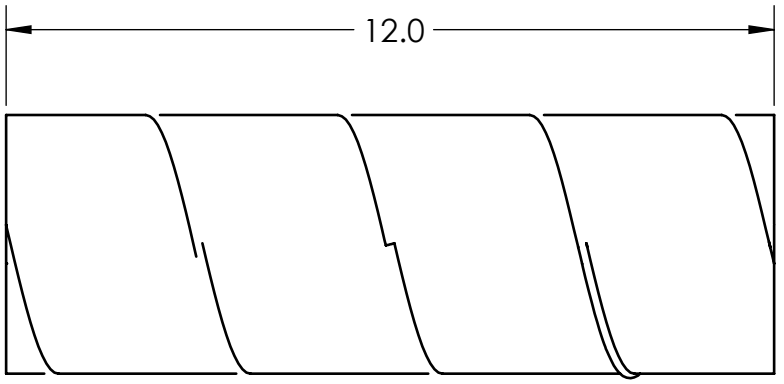

NOTE:
PART ORDERED WILL BE 24 INCHES IN LENGTH.
WILL BE CUT IN HALF, USED FOR TWO SECTIONS.

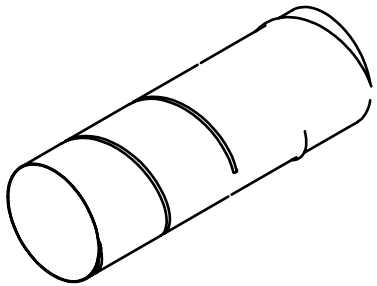

SCALE 1:6

SOLIDWORKS Educational Product. For Instructional Use Only

UNLESS OTHERWISE SPECIFIED:		NAME	DATE
DIMENSIONS ARE IN INCHES TOLERANCES: FRACTIONAL ± ANGULAR: MACH ± BEND ± ONE PLACE DECIMAL ±0.1 TWO PLACE DECIMAL ±0.01	DRAWN	J. GRAF	2/5/17
	CHECKED		
	ENG APPR.		
	MFG APPR.		
INTERPRET GEOMETRIC TOLERANCING PER:	Q.A.		
MATERIAL GALVANIZED STEEL	COMMENTS:		
FINISH			
DO NOT SCALE DRAWING			

TITLE:

12" STRAIGHT DUCT SECT.

SIZE	DWG. NO.	REV
A	2003	

SCALE: 1:3	WEIGHT:	SHEET 1 OF 1

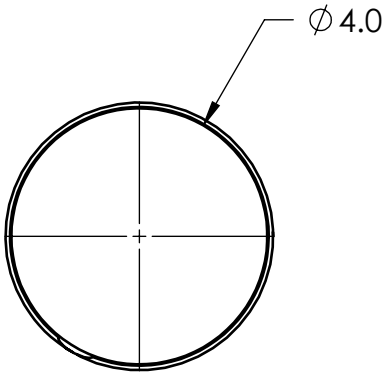

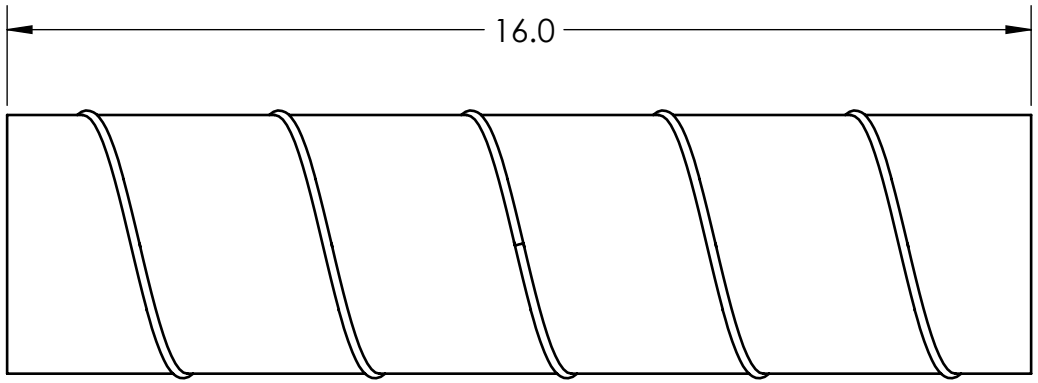

NOTE:
PART ORDERED WILL BE 24 INCHES IN LENGTH.
WILL BE CUT TO 16 INCH LENGTH.

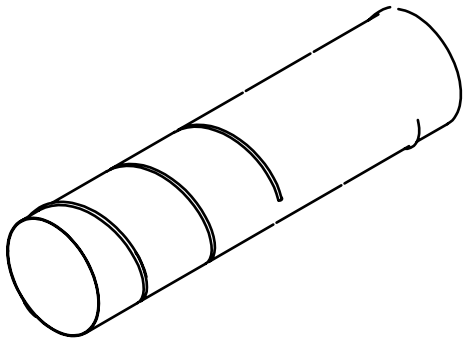

SCALE 1:6

UNLESS OTHERWISE SPECIFIED:		NAME	DATE
DIMENSIONS ARE IN INCHES TOLERANCES: FRACTIONAL ± ANGULAR: MACH ± BEND ± ONE PLACE DECIMAL ±0.1 TWO PLACE DECIMAL ±0.01	DRAWN	J. GRAF	2/5/17
	CHECKED		
	ENG APPR.		
	MFG APPR.		
INTERPRET GEOMETRIC TOLERANCING PER:	Q.A.		
MATERIAL GALVANIZED STEEL	COMMENTS:		
FINISH			
DO NOT SCALE DRAWING			

TITLE:
16" STRAIGHT DUCT SECT.

SIZE	DWG. NO.	REV
A	2004	

SCALE: 1:3	WEIGHT:	SHEET 1 OF 1

SOLIDWORKS Educational Product. For Instructional Use Only

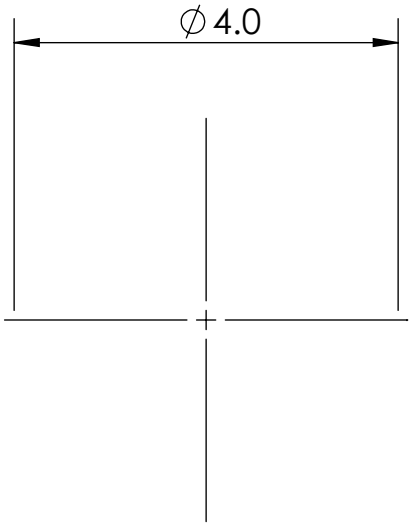

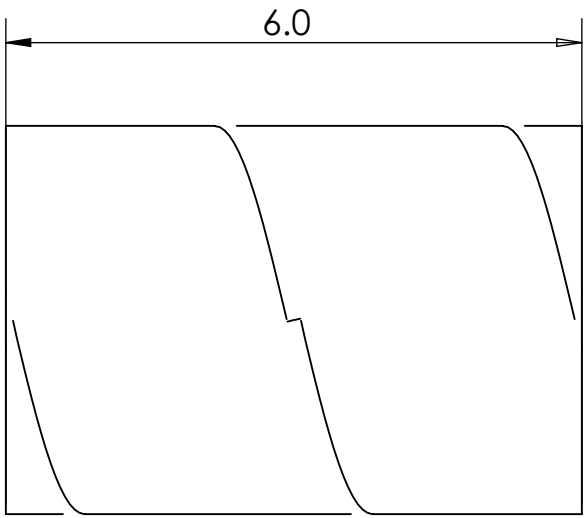

NOTE:
PART ORDERED WILL BE 24 INCHES IN LENGTH.
WILL BE CUT TO 6 INCH LENGTH.

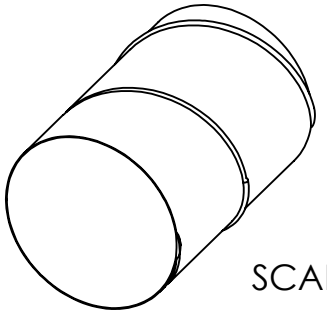

SCALE 1:4

SOLIDWORKS Educational Product. For Instructional Use Only

UNLESS OTHERWISE SPECIFIED:		NAME	DATE
DIMENSIONS ARE IN INCHES TOLERANCES: FRACTIONAL ± ANGULAR: MACH ± BEND ± ONE PLACE DECIMAL ±.1 TWO PLACE DECIMAL ±.01	DRAWN	D. PLATT	02/06/17
	CHECKED		
	ENG APPR.		
	MFG APPR.		
INTERPRET GEOMETRIC TOLERANCING PER:	Q.A.		
MATERIAL GALVANIZED STEEL	COMMENTS:		
FINISH			
DO NOT SCALE DRAWING			

TITLE:
6" STRAIGHT DUCT SECT.

SIZE	DWG. NO.	REV
A	2005	

SCALE: 1:2	WEIGHT:	SHEET 1 OF 1

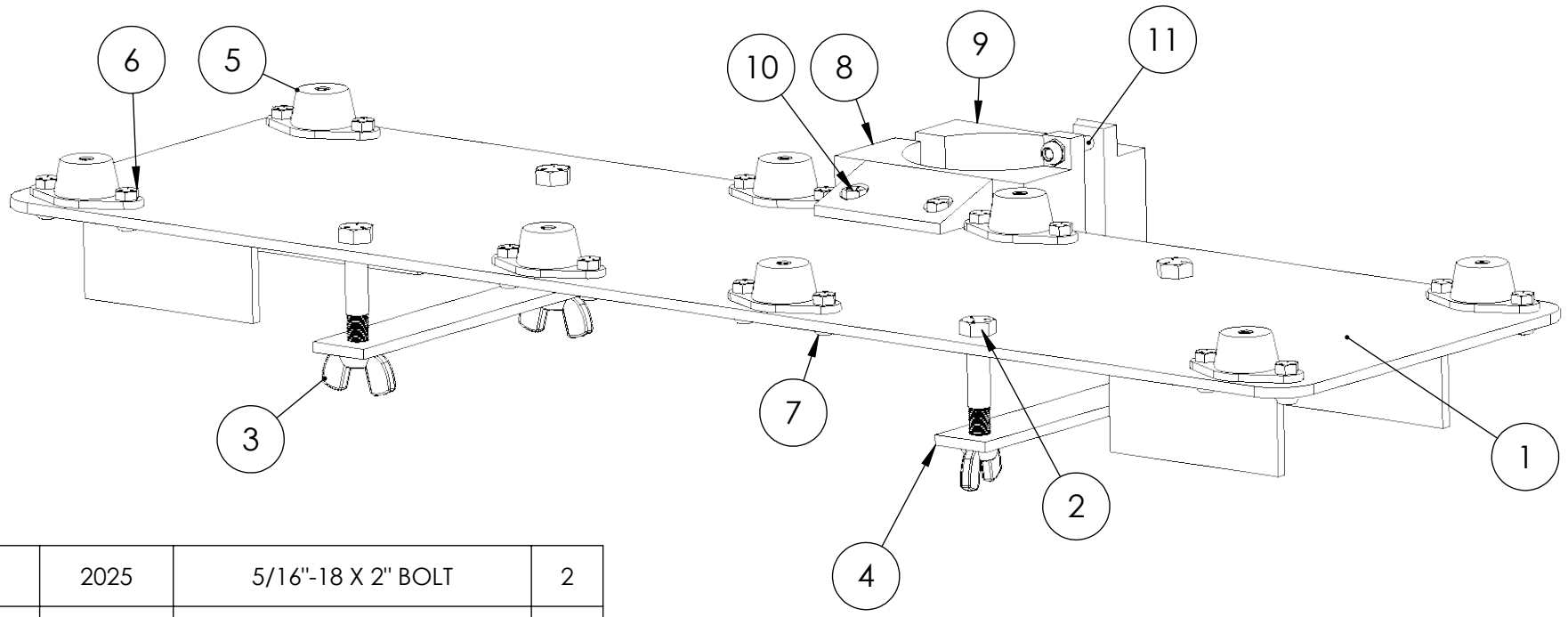

ITEM NO.	PART NO.	DESCRIPTION	QTY.
11	2025	5/16"-18 X 2" BOLT	2
10	2024	5/16"-18 X 1.5" BOLT	2
9	2026	Vertical Pipe Mount	1
8	2026	Vertical Pipe Mount	1
7	2017	5/15"-18 Open-End Cap Nut	20
6	2016	5/16"-18 X 3/4" BOLT	16
5	2015	Vibration-Damping Mount	8
4	2014	Mounting Strip	2
3	2013	1/2"-20 wing nut	4
2	2011	1/2"-20 x 3" bolt	4
1	1002	Mounted Shelf Interface Assembly	1

SOLIDWORKS Educational Product. For Instructional Use Only

UNLESS OTHERWISE SPECIFIED:		NAME	DATE
DIMENSIONS ARE IN INCHES TOLERANCES: FRACTIONAL ± ANGULAR: MACH ± BEND ± TWO PLACE DECIMAL ± THREE PLACE DECIMAL ±	DRAWN	D. PLATT	1/31/17
	CHECKED		
	ENG APPR.		
	MFG APPR.		
INTERPRET GEOMETRIC TOLERANCING PER:	Q.A.		
MATERIAL	COMMENTS:		
FINISH			
DO NOT SCALE DRAWING			

TITLE:

MOUNTED SHELF INTERFACE ASSEMBLY

SIZE	DWG. NO.	REV
A	1002	
SCALE: 1:4	WEIGHT:	SHEET 1 OF 1

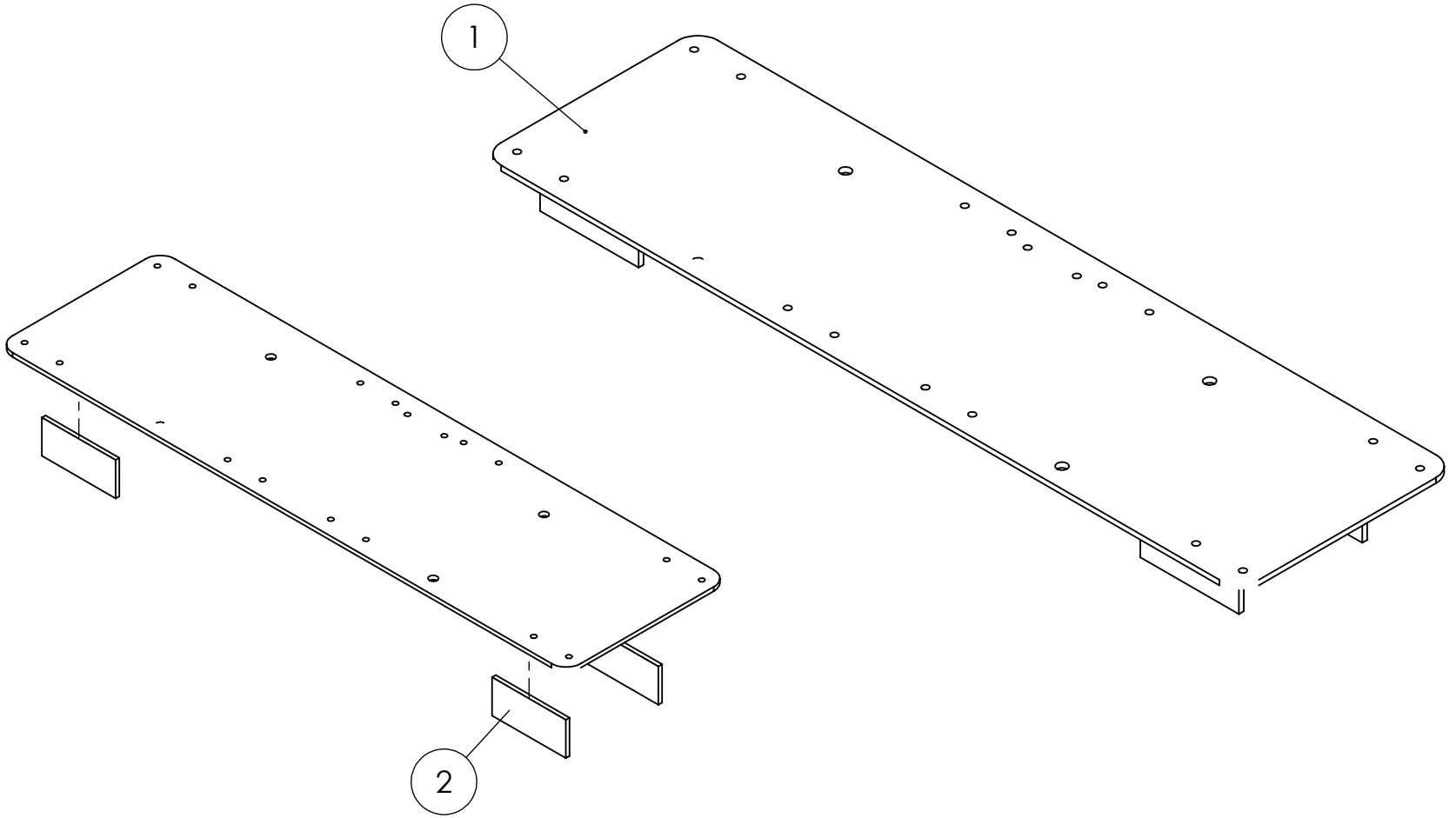

ITEM NO.	PART NO.	DESCRIPTION	QTY.
2	2018	Locator Plate	4
1	2010	Shelf Interface	1

SOLIDWORKS Educational Product. For Instructional Use Only

UNLESS OTHERWISE SPECIFIED:		NAME	DATE
DIMENSIONS ARE IN INCHES TOLERANCES: FRACTIONAL ± ANGULAR: MACH ± BEND ± TWO PLACE DECIMAL ± THREE PLACE DECIMAL ±	DRAWN	D. PLATT	1/31/17
	CHECKED		
	ENG APPR.		
	MFG APPR.		
INTERPRET GEOMETRIC TOLERANCING PER:	Q.A.		
MATERIAL	COMMENTS:		
FINISH			
DO NOT SCALE DRAWING			

TITLE:

SHELF INTERFACE ASSEMBLY

SIZE	DWG. NO.	REV
A	2010-A	

SCALE: 1:12	WEIGHT:	SHEET 1 OF 1

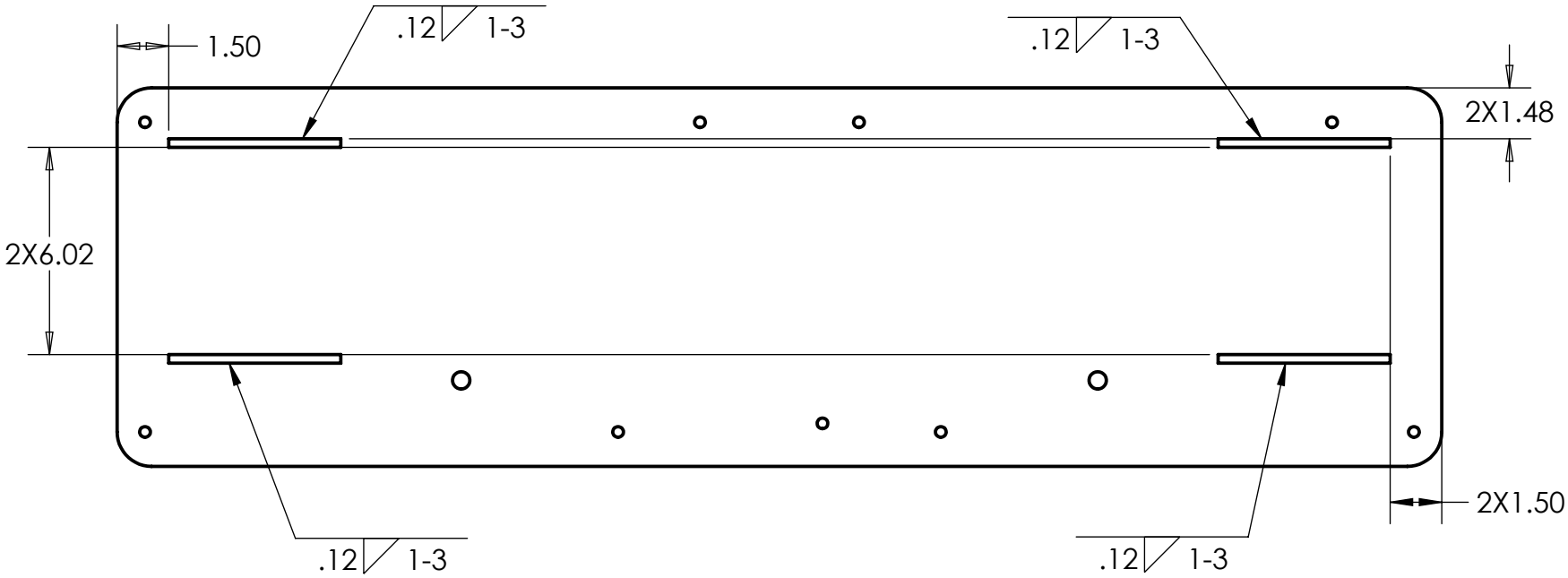

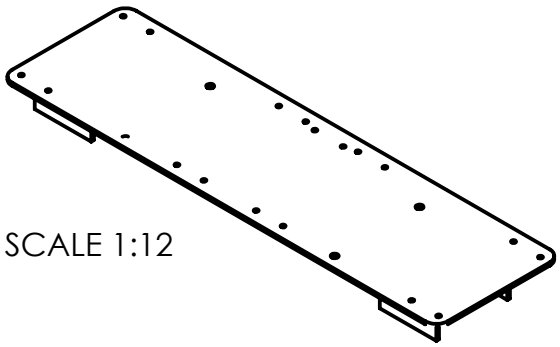

UNLESS OTHERWISE SPECIFIED: DIMENSIONS ARE IN INCHES TOLERANCES: FRACTIONAL ± ANGULAR: MACH ± BEND ± TWO PLACE DECIMAL ±.01	DRAWN	D. PLATT	1/31/17
	CHECKED		
	ENG APPR.		
	MFG APPR.		
INTERPRET GEOMETRIC TOLERANCING PER:	Q.A.		
MATERIAL	COMMENTS:		
FINISH			
DO NOT SCALE DRAWING			

TITLE:
SHELF INTERFACE ASSEMBLY WELDING

SIZE	DWG. NO.	REV
A	2010-B	

SCALE: 1:5 | WEIGHT: | SHEET 1 OF 1

SOLIDWORKS Educational Product. For Instructional Use Only

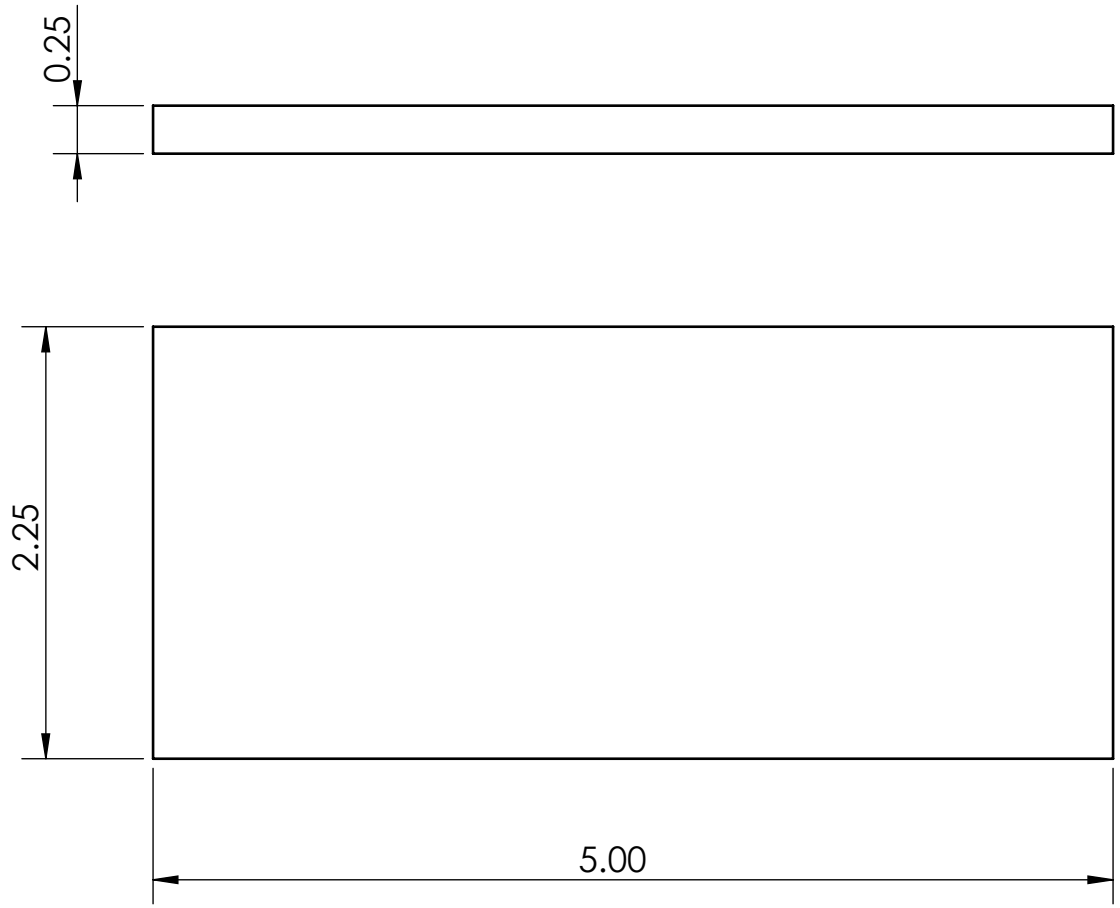

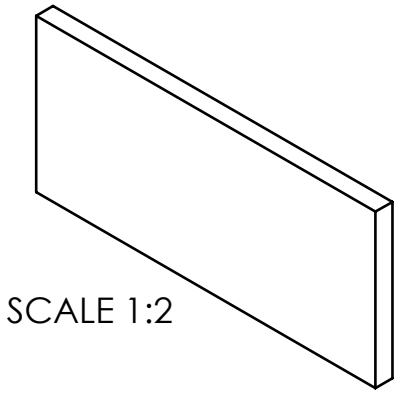

SOLIDWORKS Educational Product. For Instructional Use Only

UNLESS OTHERWISE SPECIFIED:		NAME	DATE
DIMENSIONS ARE IN INCHES TOLERANCES: FRACTIONAL ± ANGULAR: MACH ± BEND ± TWO PLACE DECIMAL ±.01 THREE PLACE DECIMAL ±.005	DRAWN	D. PLATT	2/2/17
	CHECKED		
	ENG APPR.		
	MFG APPR.		
INTERPRET GEOMETRIC TOLERANCING PER:	Q.A.		
MATERIAL ALUMINUM 6061	COMMENTS:		
FINISH			
DO NOT SCALE DRAWING			

TITLE:

LOCATOR PLATE

SIZE	DWG. NO.	REV
A	3001	

SCALE: 1:1 | WEIGHT: | SHEET 1 OF 1

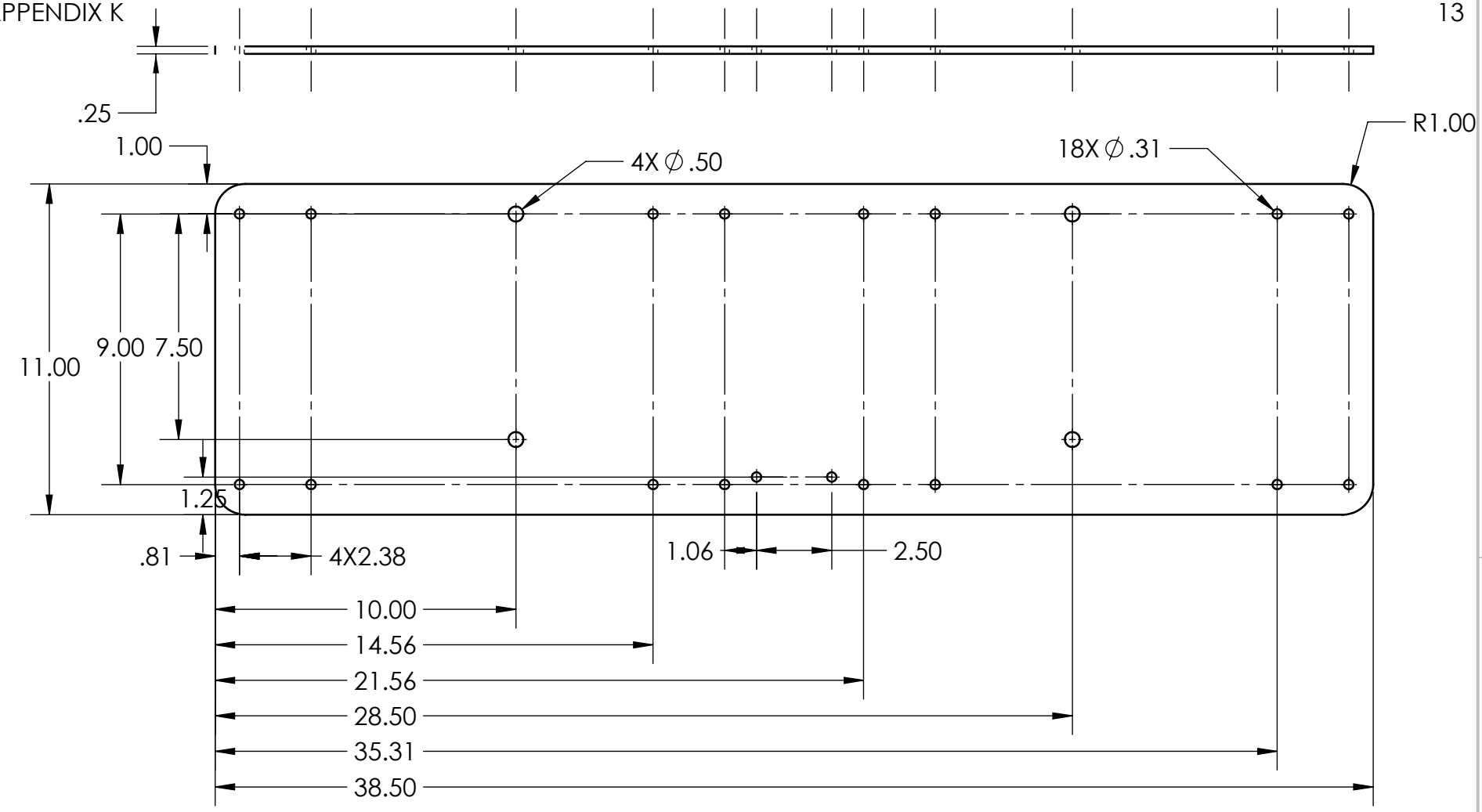

		NAME	DATE
UNLESS OTHERWISE SPECIFIED:	DRAWN	D. PLATT	1/31/17
DIMENSIONS ARE IN INCHES TOLERANCES: FRACTIONAL ± ANGULAR: MACH ± BEND ± TWO PLACE DECIMAL ±.01 THREE PLACE DECIMAL ±.005	CHECKED		
	ENG APPR.		
	MFG APPR.		
INTERPRET GEOMETRIC TOLERANCING PER:	Q.A.		
MATERIAL ALUMINUM 6061	COMMENTS:		
FINISH			
DO NOT SCALE DRAWING			

TITLE:
SHELF INTERFACE

SIZE	DWG. NO.	REV
A	3002	

SCALE: 1:5 | WEIGHT: | SHEET 1 OF 1

SOLIDWORKS Educational Product. For Instructional Use Only

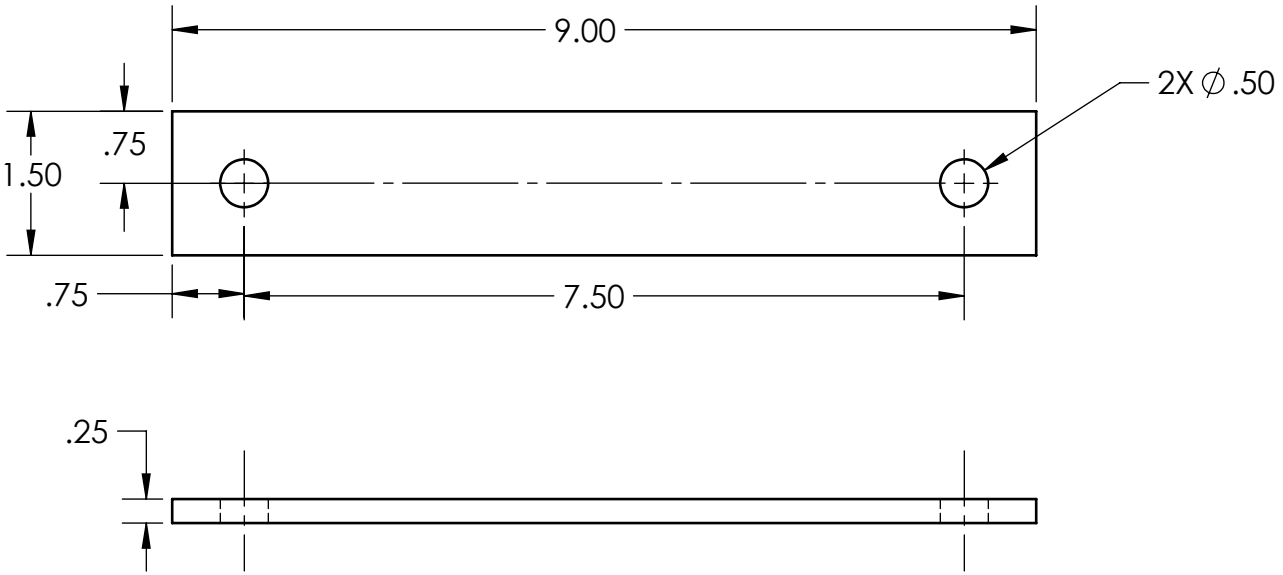

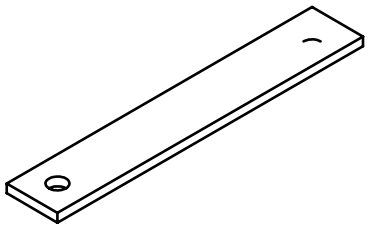

SCALE 1:4

UNLESS OTHERWISE SPECIFIED:		NAME	DATE
DIMENSIONS ARE IN INCHES TOLERANCES: FRACTIONAL ± ANGULAR: MACH ± BEND ± TWO PLACE DECIMAL ±.01 THREE PLACE DECIMAL ±.005	DRAWN	J. GRAF	1/30/17
	CHECKED		
	ENG APPR.		
	MFG APPR.		
INTERPRET GEOMETRIC TOLERANCING PER:	Q.A.		
MATERIAL 1018 CARBON STEEL	COMMENTS:		
FINISH			
DO NOT SCALE DRAWING			

TITLE:
MOUNTING STRIP

SIZE	DWG. NO.	REV
A	2013	

SCALE: 1:2 | WEIGHT: | SHEET 1 OF 1

SOLIDWORKS Educational Product. For Instructional Use Only

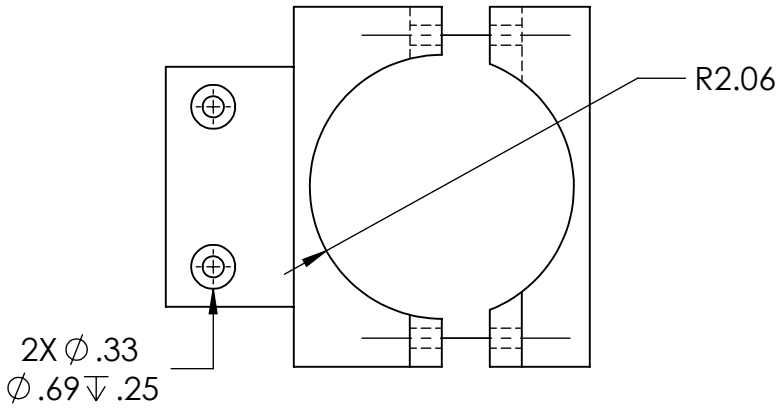

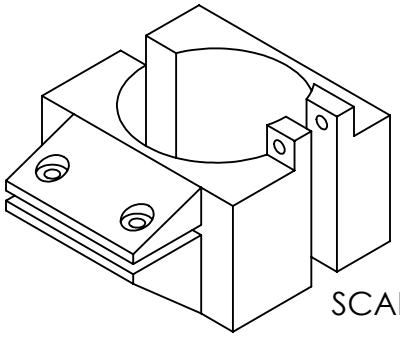

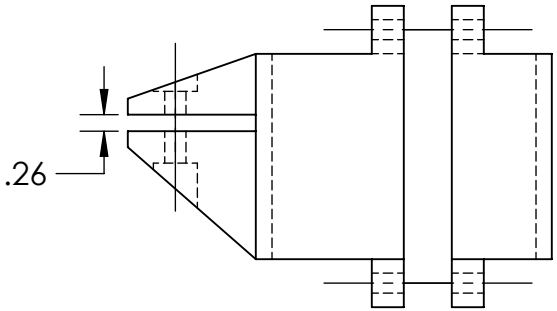

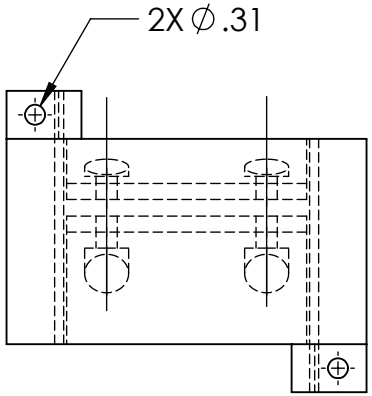

NOTE: THIS PART IS BEING 3D PRINTED WITH ABS PLASTIC. NO DIMENSIONING IS NECCESSARY PAST DEFINING CERTAIN KEY ASPECTS FOR REFERENCE PURPOSES.

SOLIDWORKS Educational Product. For Instructional Use Only

UNLESS OTHERWISE SPECIFIED:		NAME	DATE
DIMENSIONS ARE IN INCHES TOLERANCES: FRACTIONAL ± ANGULAR: MACH ± BEND ± TWO PLACE DECIMAL ±.01 THREE PLACE DECIMAL ±.005	DRAWN	D. PLATT	02/05/17
	CHECKED		
	ENG APPR.		
	MFG APPR.		
INTERPRET GEOMETRIC TOLERANCING PER:	Q.A.		
MATERIAL ABS PLASTIC	COMMENTS:		
FINISH			
DO NOT SCALE DRAWING			

TITLE:

VERTICAL PIPE MOUNT

SIZE	DWG. NO.	REV
A	2026	

SCALE: 1:3	WEIGHT:	SHEET 1 OF 1

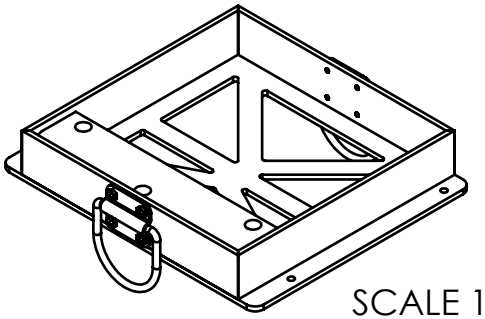

SCALE 1:8

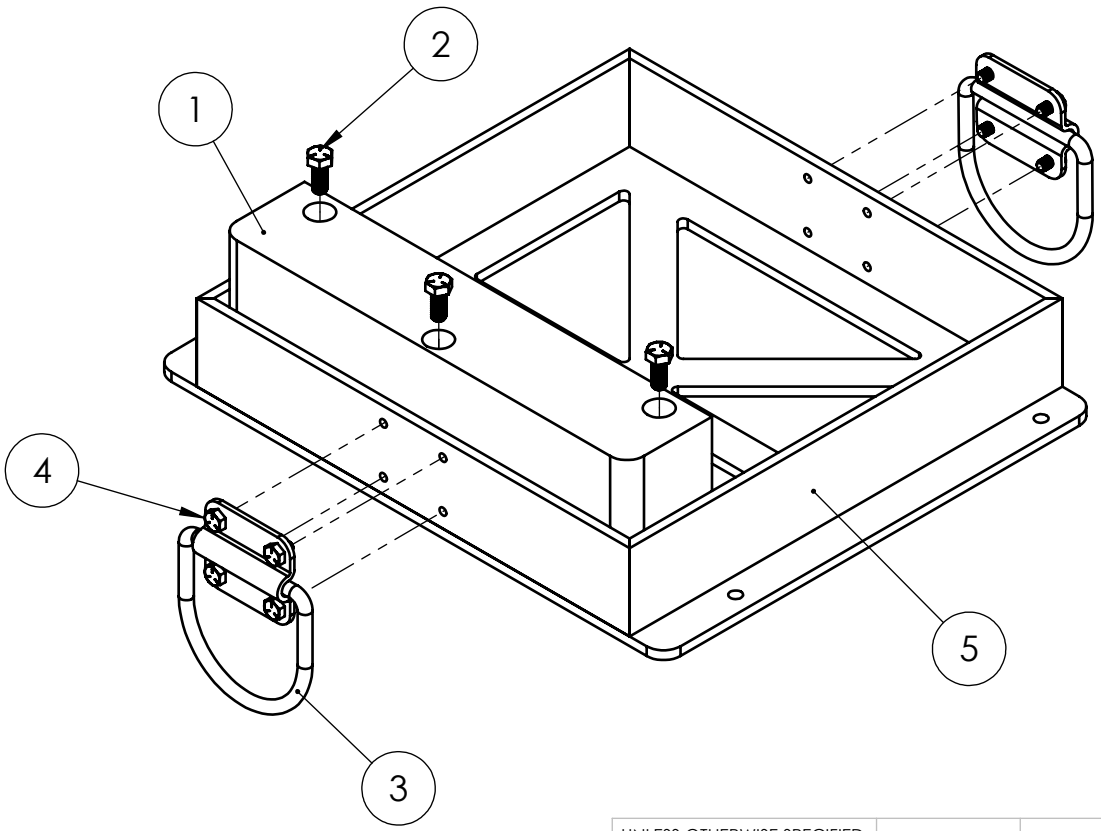

ITEM NO.	PART NUMBER	DESCRIPTION	QTY.
5	2022	Base Assembly	1
4	2020	1/4"-20 X 3/8" BOLT	8
3	2019	TIE-DOWN RING	2
2	2016	5/16"-18 X 3/4" BOLT	3
1	2021	AL SAFETY BLOCK	1

SOLIDWORKS Educational Product. For Instructional Use Only

UNLESS OTHERWISE SPECIFIED:		NAME	DATE
DIMENSIONS ARE IN INCHES TOLERANCES: FRACTIONAL ± ANGULAR: MACH ± BEND ± TWO PLACE DECIMAL ± THREE PLACE DECIMAL ±	DRAWN	J. GRAF	1/19/17
	CHECKED		
	ENG APPR.		
	MFG APPR.		
INTERPRET GEOMETRIC TOLERANCING PER:	Q.A.		
MATERIAL	COMMENTS:		
FINISH			
DO NOT SCALE DRAWING			

TITLE:

BLOWER BASE ASSEMBLY

SIZE	DWG. NO.	REV
A	1003	

SCALE:1:4	WEIGHT:	SHEET 1 OF 1

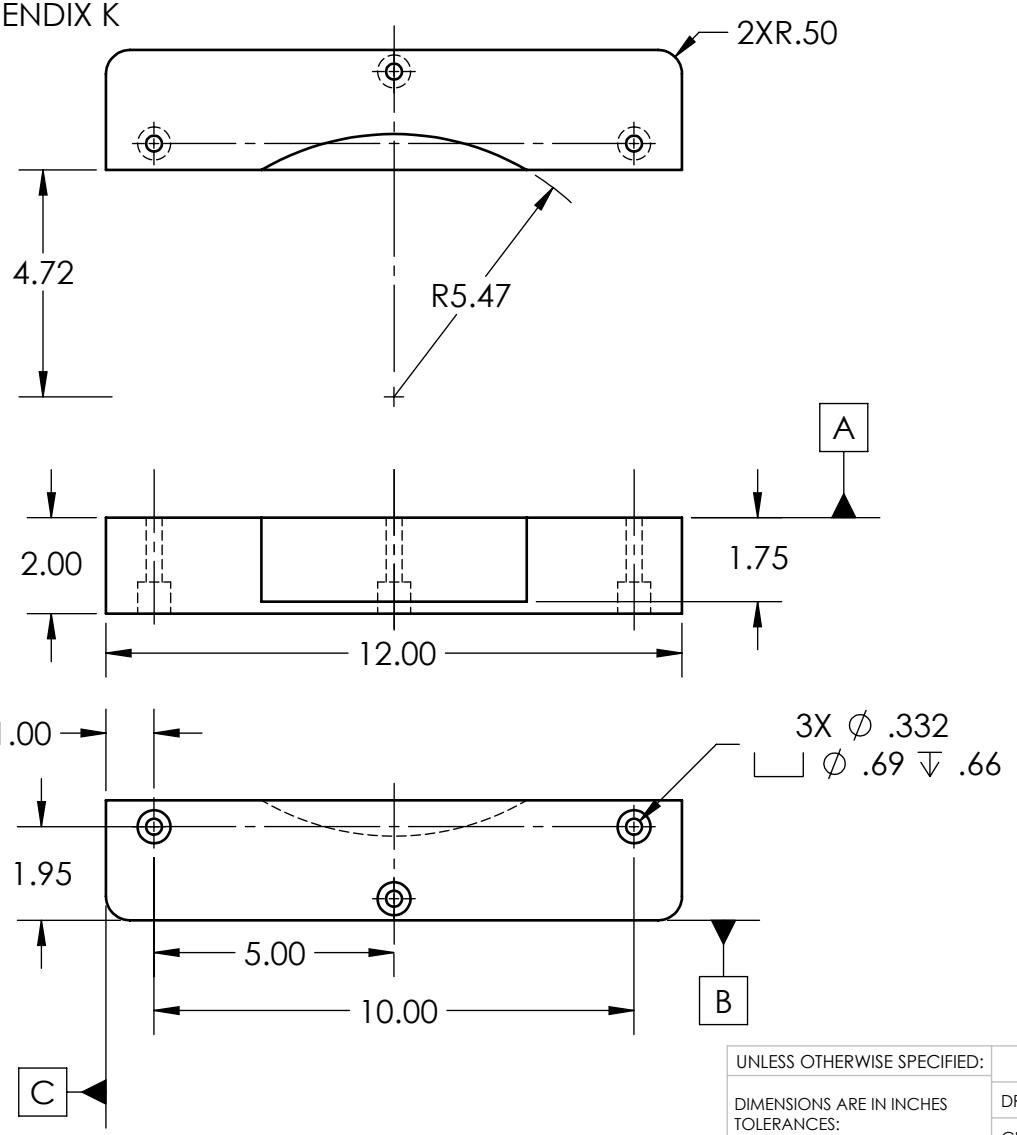

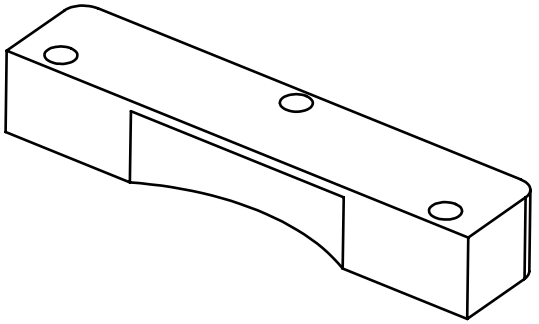

UNLESS OTHERWISE SPECIFIED:		NAME	DATE
DIMENSIONS ARE IN INCHES TOLERANCES: FRACTIONAL ± ANGULAR: MACH ± BEND ± TWO PLACE DECIMAL ±.01 THREE PLACE DECIMAL ±.002	DRAWN	J. GRAF	1/30/17
	CHECKED		
	ENG APPR.		
	MFG APPR.		
	Q.A.		
INTERPRET GEOMETRIC TOLERANCING PER:	COMMENTS:		
MATERIAL ALUMINUM 6061			
FINISH			
DO NOT SCALE DRAWING			

TITLE:

AL SAFETY BLOCK

SIZE	DWG. NO.	REV
A	2020	

SCALE: 1:4 | WEIGHT: | SHEET 1 OF 1

SOLIDWORKS Educational Product. For Instructional Use Only

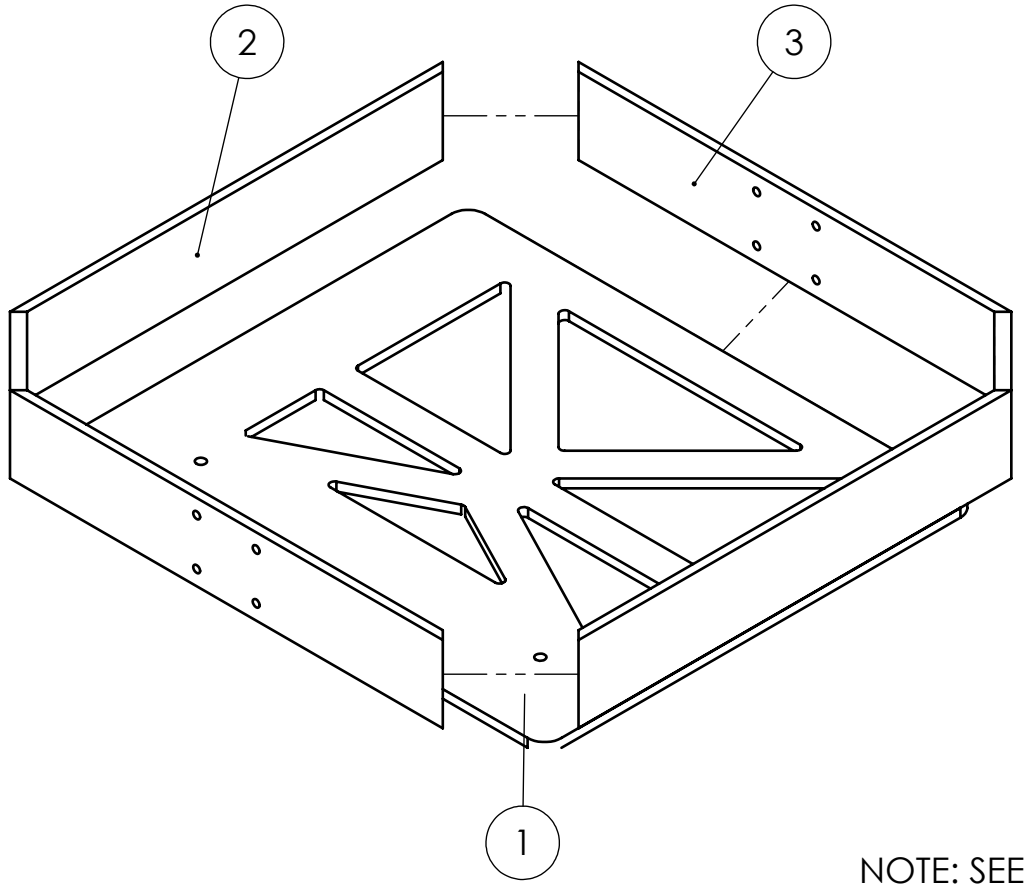

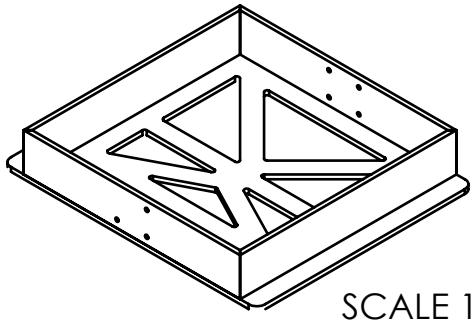

SCALE 1:8

NOTE: SEE DWG. NO. 2022-B FOR WELDING SPECS

ITEM NO.	PART NUMBER	DESCRIPTION	QTY.
3	3003	TIE DOWN WALL	2
2	3002	SIDE WALL	2
1	3001	BASE PLATE	1

SOLIDWORKS Educational Product. For Instructional Use Only

UNLESS OTHERWISE SPECIFIED:		NAME	DATE
DIMENSIONS ARE IN INCHES TOLERANCES: FRACTIONAL ± ANGULAR: MACH ± BEND ± TWO PLACE DECIMAL ± THREE PLACE DECIMAL ±	DRAWN	D. PLATT	1/31/17
	CHECKED		
	ENG APPR.		
	MFG APPR.		
INTERPRET GEOMETRIC TOLERANCING PER:	Q.A.		
MATERIAL	COMMENTS:		
FINISH			
DO NOT SCALE DRAWING			

TITLE:

BASE ASSEMBLY

SIZE	DWG. NO.	REV
A	2021-A	

SCALE: 1:4	WEIGHT:	SHEET 1 OF 1

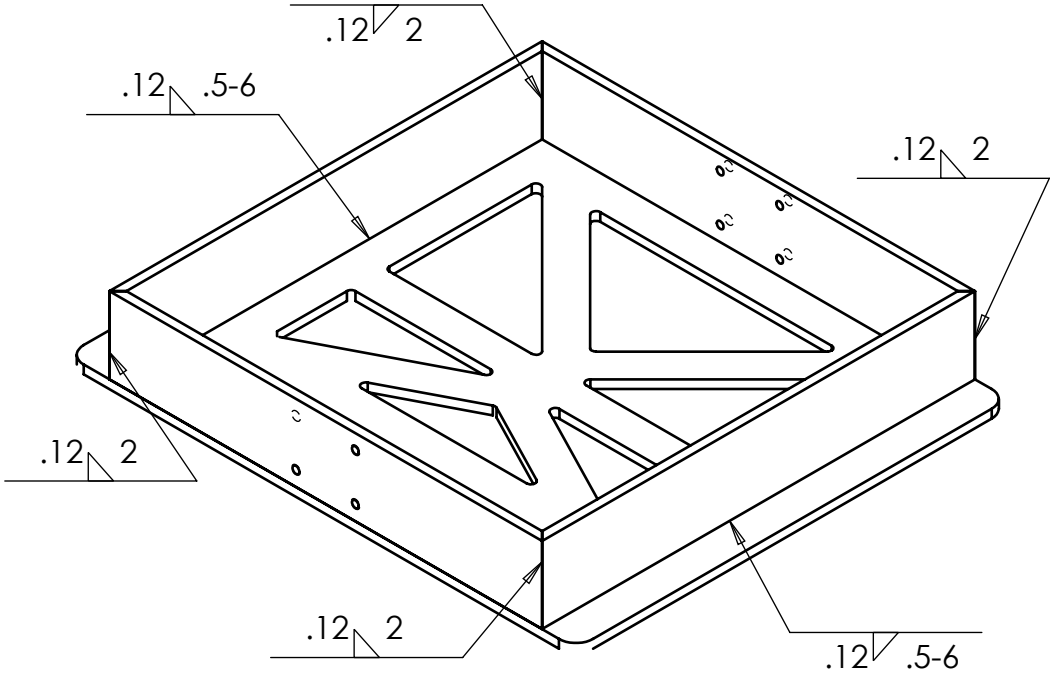

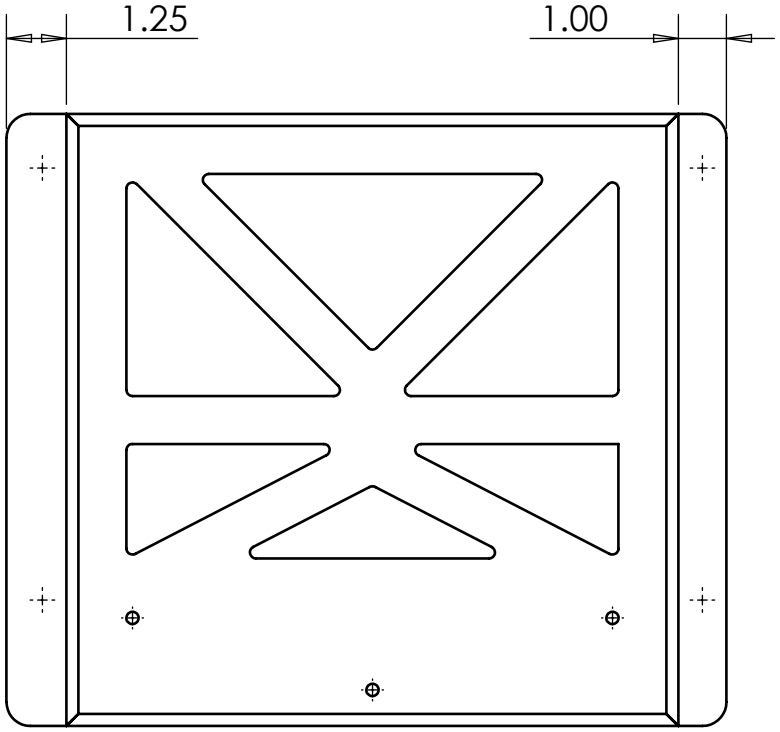

UNLESS OTHERWISE SPECIFIED:		NAME	DATE
DIMENSIONS ARE IN INCHES TOLERANCES: FRACTIONAL ± ANGULAR: MACH ± BEND ± ONE PLACE DECIMAL ±.05 TWO PLACE DECIMAL ±.01	DRAWN	J. GRAF	1/19/17
	CHECKED		
	ENG APPR.		
	MFG APPR.		
INTERPRET GEOMETRIC TOLERANCING PER:	Q.A.		
MATERIAL	COMMENTS:		
FINISH			
DO NOT SCALE DRAWING			

TITLE:

BASE ASSEMBLY WELDING

SIZE	DWG. NO.	REV
A	2022-B	
SCALE: 1:4	WEIGHT:	SHEET 1 OF 1

SOLIDWORKS Educational Product. For Instructional Use Only

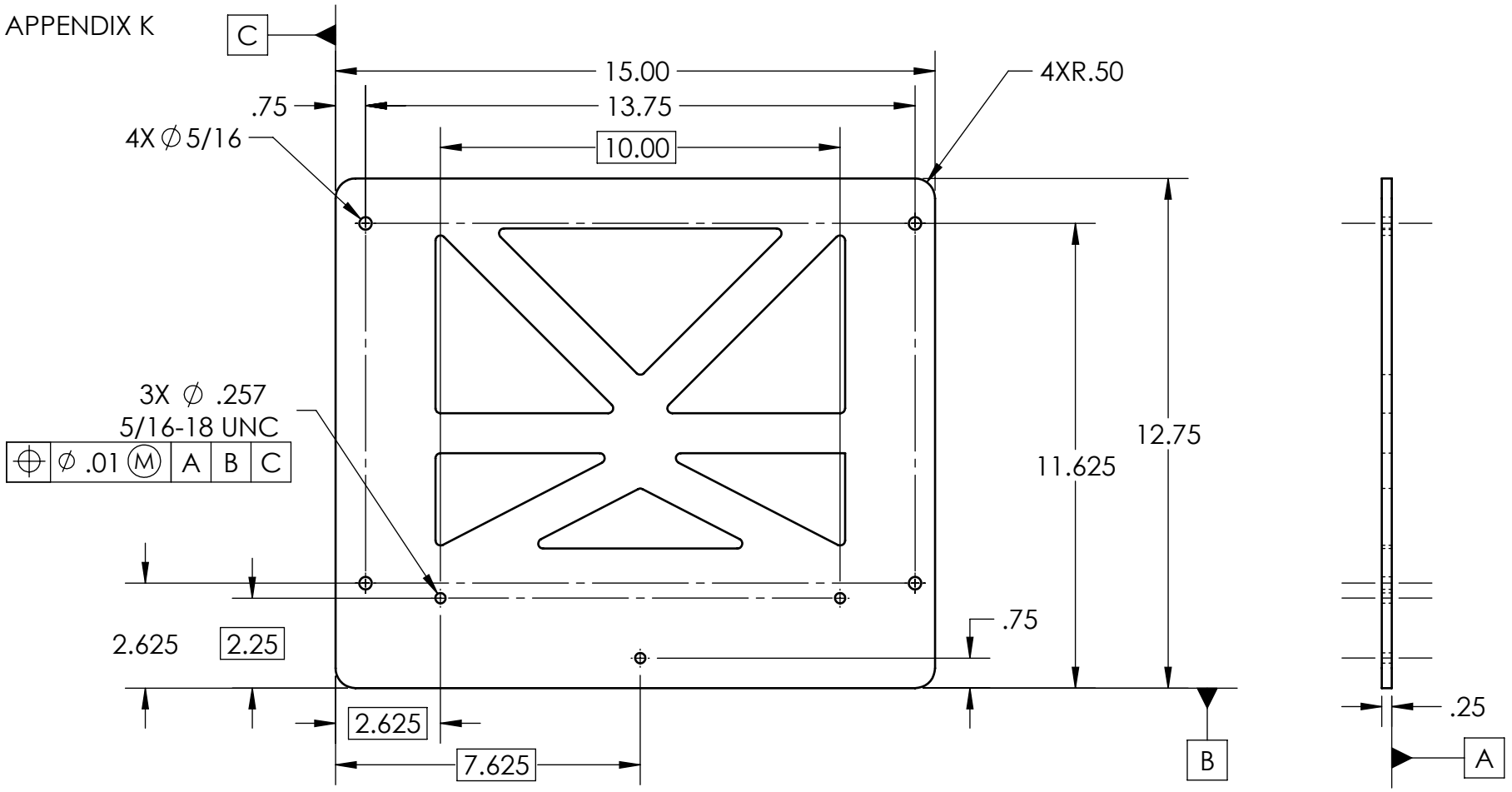

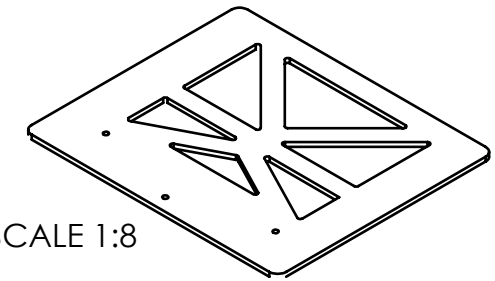

SCALE 1:8

NOTE: WEBBING IN BASE PLATE WILL BE CUT WITH AN OPTICAL PLASMA CUTTER, NO MACHINING DIMENSIONS NEEDED. REFERENCE PRINTED TOP VIEW OF PART.

SOLIDWORKS Educational Product. For Instructional Use Only

UNLESS OTHERWISE SPECIFIED:		NAME	DATE
DIMENSIONS ARE IN INCHES TOLERANCES: FRACTIONAL ± ANGULAR: MACH ± BEND ± TWO PLACE DECIMAL ±.01 THREE PLACE DECIMAL ±.005	DRAWN	J. GRAF	1/19/17
	CHECKED		
	ENG APPR.		
	MFG APPR.		
INTERPRET GEOMETRIC TOLERANCING PER:	Q.A.		
MATERIAL ALUMINUM 6061	COMMENTS:		
FINISH			
DO NOT SCALE DRAWING			

TITLE:

BASE PLATE

SIZE	DWG. NO.	REV
A	3003	

SCALE: 1:4 | WEIGHT: | SHEET 1 OF 1

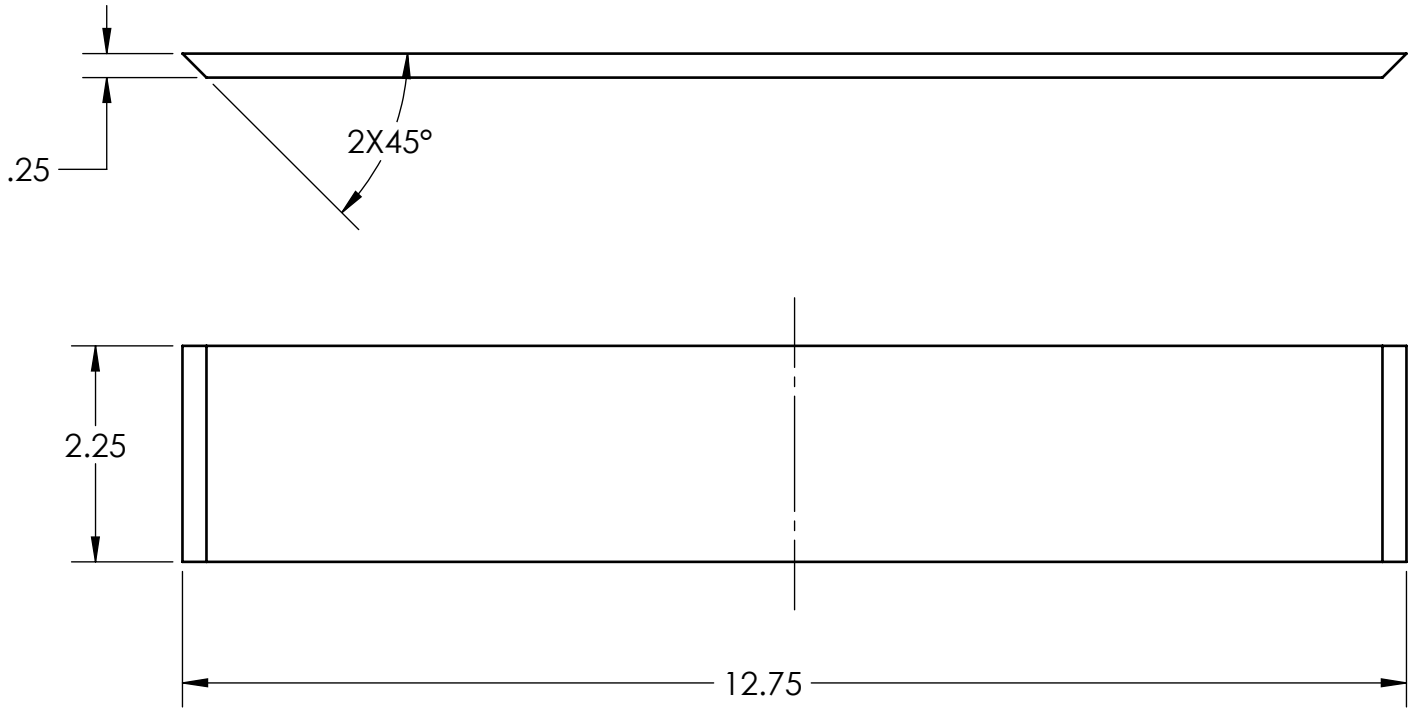

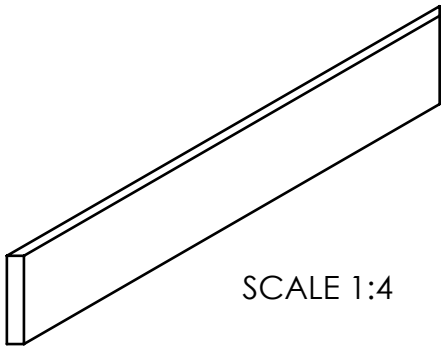

SOLIDWORKS Educational Product. For Instructional Use Only

UNLESS OTHERWISE SPECIFIED:		NAME	DATE
DIMENSIONS ARE IN INCHES TOLERANCES: FRACTIONAL ± ANGLES: ±1° TWO PLACE DECIMAL ±.01 THREE PLACE DECIMAL ±.005	DRAWN	D. PLATT	1/30/17
	CHECKED		
	ENG APPR.		
	MFG APPR.		
INTERPRET GEOMETRIC TOLERANCING PER:	Q.A.		
MATERIAL ALUMINUM 6061	COMMENTS:		
FINISH			
DO NOT SCALE DRAWING			

TITLE:

SIDE WALL

SIZE	DWG. NO.	REV
A	3004	
SCALE: 1:2	WEIGHT:	SHEET 1 OF 1

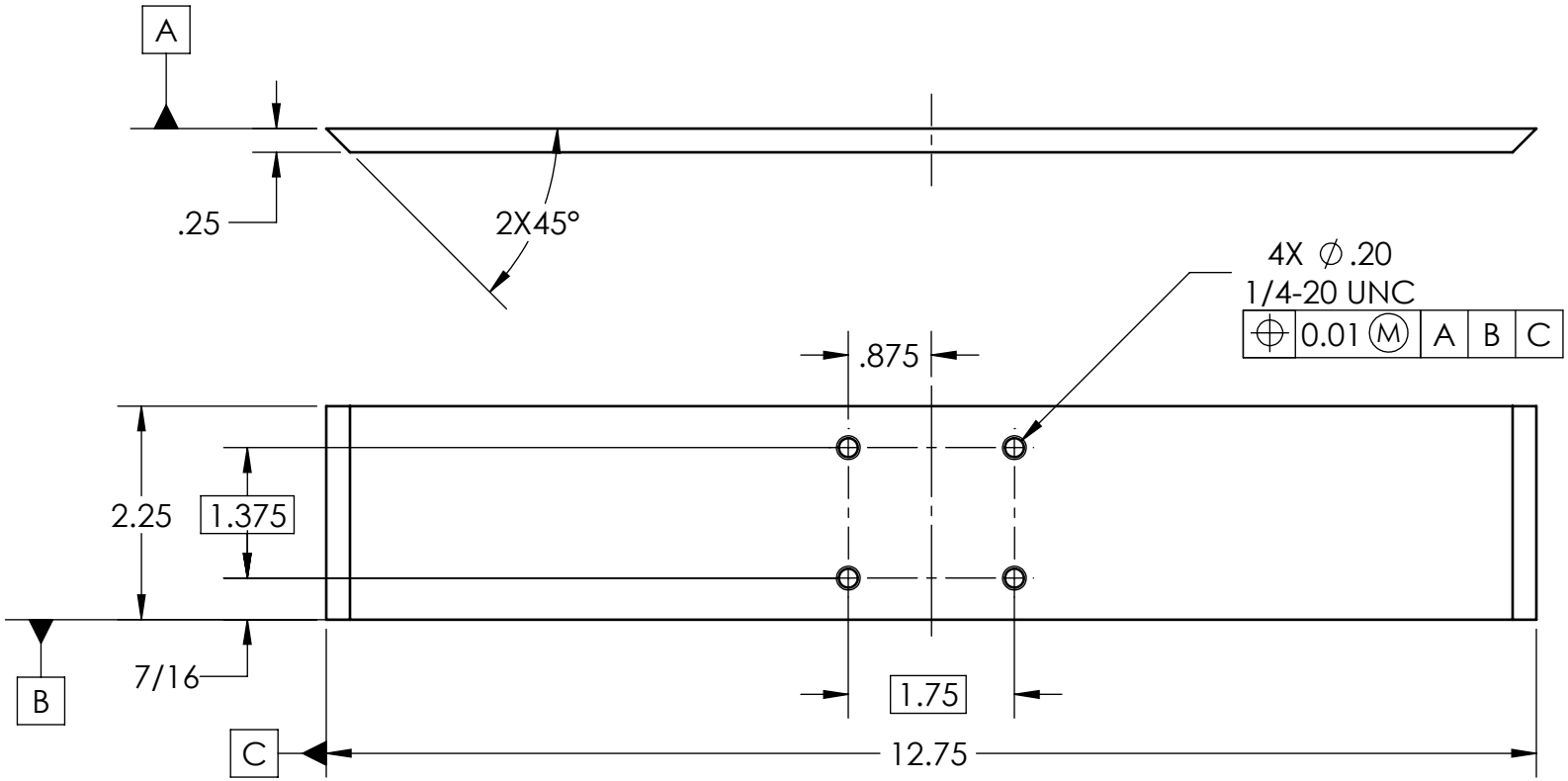

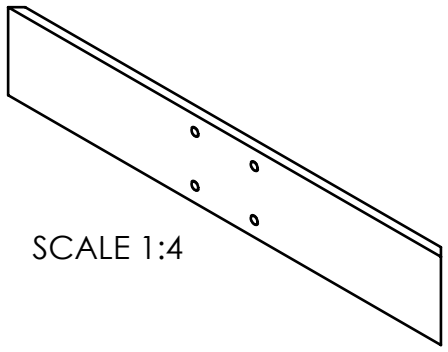

UNLESS OTHERWISE SPECIFIED:		NAME	DATE
DIMENSIONS ARE IN INCHES TOLERANCES: FRACTIONAL ±1/32 ANGLES: ±1° TWO PLACE DECIMAL ±.01 THREE PLACE DECIMAL ±.005	DRAWN	J. GRAF	1/31/17
	CHECKED		
	ENG APPR.		
	MFG APPR.		
INTERPRET GEOMETRIC TOLERANCING PER:	Q.A.		
MATERIAL ALUMINUM 6061	COMMENTS:		
FINISH			
DO NOT SCALE DRAWING			

TITLE:
TIE-DOWN WALL

SIZE	DWG. NO.	REV
A	3005	
SCALE: 1:2	WEIGHT:	SHEET 1 OF 1

SOLIDWORKS Educational Product. For Instructional Use Only

APPENDIX L

MANUFACTURING DETAILS

NOTE: ALL MACHINING AND WELDING WILL BE DONE IN THE HANGER MACHINE SHOP
NOTE: SEE BILL OF MATERIALS FOR RAW MATERIALS TO BE USED DURING MANUFACTURING (APPENDIX O)

Detail #	REFERENCE DRAWING		STEP	DESCRIPTION	TOOL USED	RAW MATERIAL #	AMOUNT OF STOCK	TIME ESTIMATE (hr)
1.	3003 BASE PLATE		i.	PLASMA CUT 1/4" STOCK ALUMINUM PLATE ACCORDING TO DWG. 3003. THIS CUT WILL INCLUDE SIZE, CORNER FILLETS, AND WEIGHT-REDUCING WEBBING	OPTICAL PLASMA CUTTER	3	15 X 12.75"	4
			ii.	DRILL OUT 4x ⌀5/16" THROUGH-HOLES AS PER DWG. 3003	DRILL PRESS			
			iii.	DRILL OUT 3x ⌀0.257" THROUGH-HOLES AS PER DWG. 3003	DRILL PRESS			
			iv.	TAP THE 3 THROUGH-HOLES FROM iii. USING A 5/16"-18 UNC TAP	HOLE TAP			
2.	3004 SIDE WALL		i.	CUT 13" LENGTH FROM STOCK 2.25" WIDE, 0.25" THICK ALUMINUM BAR	METAL SAW	1	13"	2
			ii.	ANGLE CUT SHORT EDGES TO 45° AS PER DWG. 3004	METAL SAW			
3.	3005 TIE-DOWN WALL		i.	CUT 13" LENGTH FROM STOCK 2.25" WIDE, 0.25" THICK ALUMINUM BAR	METAL SAW	1	13"	3
			ii.	ANGLE CUT SHORT EDGES TO 45° AS PER DWG. 3005	METAL SAW			
			iii.	DRILL OUT 4x ⌀0.20" THROUGH-HOLES AS PER DWG. 3005	DRILL PRESS			
			iv.	TAP THE 4 THROUGH-HOLES FROM iv. USING A 1/4"-20 UNC TAP	HOLE TAP			
4.	2021 BASE ASSEMBLY		i.	WELD 2x SIDE WALL (DWG. 3004) AND 2x TIE-DOWN WALL (DWG. 3005) TO 1x BASE PLATE (DWG. 3003) AS PER DWG. 2021	MIG / TIG WELDING			3
5.	2020 AL SAFETY BLOCK		i.	CUT STOCK 12" FROM 2"x2.5" STOCK ALUMINUM STRIP	METAL SAW	5	2.5 X 12	4
			ii.	DRILL OUT 3x ⌀0.33" THROUGH HOLES AS PER DWG. 2020	DRILL PRESS			

		iii. COUNTERBORE 3x ⌀0.69" TO A 0.66" DEPTH AS PER DWG. 2020	DRILL PRESS			
		iv. MILL 2x R0.50" FILLETS AS PER DWG. 2020 USING A CIRCULAR VISE	MILL			
		v. MILL R5.47" ARC CUT IN BLOCK AS PER DWG. 2020 USING A CIRCULAR VISE	MILL			
6.	3001 LOCATOR PLATE	i. CUT 5" LENGTH FROM STOCK 2.25" WIDE, 0.25" THICK ALUMINUM BAR	METAL SAW	2	5"	2
7.	3002 SHELF INTERFACE	i. PLASMA CUT 1/" STOCK ALUMINUM PLATE ACCORDING TO DWG. 3002. THIS CUT WILL INCLUDE SIZE AND CORNER FILLETS	OPTICAL PLASMA CUTTER	4	11 X 38.50"	4
		ii. DRILL OUT 18x ⌀5/16" THROUGH-HOLES IN PLATE AS PER DWG. 3002	DRILL PRESS			
		iii. DRILL OUT 4x ⌀1/2" THROUGH-HOLES IN PLATE ACCORDING TO DWG. 3002 AS PER DWG. 3002	DRILL PRESS			
8.	2010 SHELF INTERFACE ASSEMBLY	i. WELD 4x LOCATOR PLATES (DWG. 3001) TO 1 X SHELF INTERFACE (DWG. 3002) AS PER DWG. 2010	MIG / TIG WELDING			3
9.	2014 MOUNTING STRIP	i. CUT 9" LENGTH FROM 0.25" THICK STOCK STEEL BAR	METAL SAW	6	9 X 1.50"	2
		ii. DRILL 2x ⌀1/2" THROUGH-HOLES AS PER DWG. 2014	DRILL PRESS			
10.	2026 VERTICAL PIPE MOUNT	i. THIS COMPONENT WILL BE PRINTED ON AN ABS 3D PRINTER	ABS 3D PRINTER			8 CAN BE LEFT UNATENDED
11.	2001 NOZZLE	i. THIS COMPONENT WILL BE PRINTED ON AN ABS 3D PRINTER IN A SERIES OF 7 PARTS AND BONDED USING MICRO-MARK SOLVENT	ABS 3D PRINTER			60 CAN BE LEFT UNATENDED
12.	2003, 2004, 2005 DUCT	i. CUT 1x 16", 2x 12", 2x 6" LENGTHS FROM STOCK 24" DUCTING LENGTHS	HORZ. BAND SAW OR TIN SNIPS	7		4

NOW THAT WE HAVE CHOSEN A NOZZLE TYPE, IT MUST BE CORRECTLY SIZED FOR AN INTENDED THROTTLE SPEED. THE INITIAL THROTTLE OPERATING POINT WILL BE ≈75%. ASSUMING ≈75% THROTTLE CORRESPONDS TO ≈75% VOLUMETRIC FLOWRATE, WE CAN EXPECT A FLOWRATE OF ≈ 684 cfm.

NOW APPLYING CONTINUITY ASSUMING A Ø4" INLET AND THAT THE DENSITY OF AIR DOES NOT CHANGE SIGNIFICANTLY:

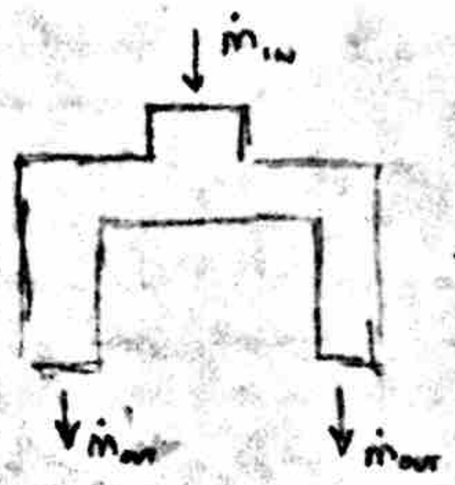

$$\dot{m}_{IN} = 2\dot{m}_{OUT}$$

$$\dot{V}_{in}\rho = 2\dot{V}_{out}\rho$$

$$\dot{V}_{IN} = 2V_{OUT}A_{OUT} \longrightarrow A_{OUT} = \frac{\dot{V}_{IN}}{2V_{OUT}}$$

OUR $\dot{V}_{IN}$ IS SET TO 684 cfm AND THE V_{OUT} TARGET IS 700 ft/sec AT THE EXITS. THE GEOMETRY OF OUR NOZZLE OUTLET IS AS SUCH:

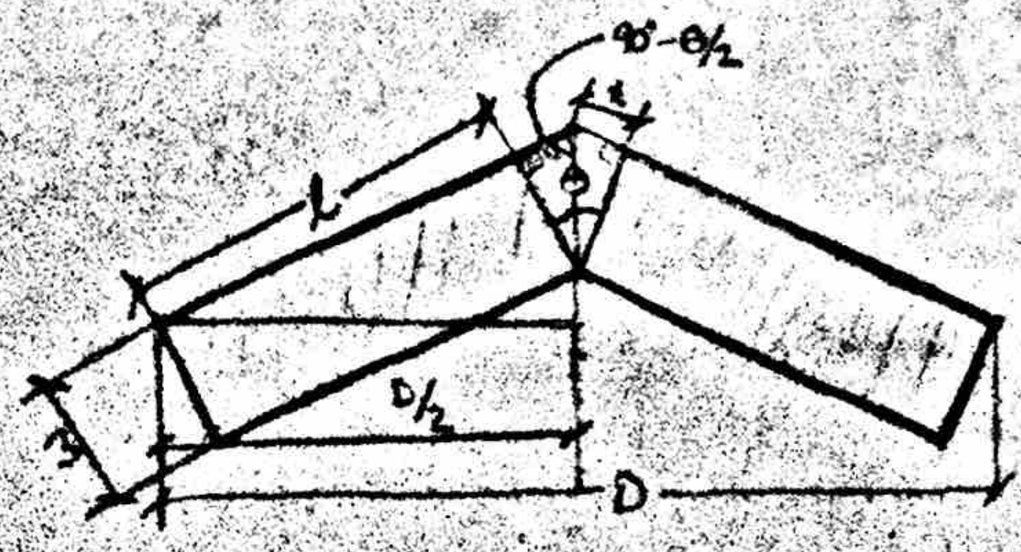

WHERE D = 18" TO ALLOW TRACK CLEARANCE

θ = 25°

THIS AREA, A_{out}, CAN BE TOTALLED AS SUCH:

$$A_{out} = 2l_{ea} + t_{ea}$$

FROM CONTINUITY:

$$A_{out} = \frac{\dot{V}_{in}}{2V_{out}}$$

$$= \left(\frac{684\ ft^3}{1\ min}\right)\left(\frac{1\ min}{700\ ft}\right)\left(\frac{12\ in}{1\ ft}\right)^2\left(\frac{1\ min}{60\ sec}\right) \cdot 0.5$$

$$\underline{A_{out} = 14.10\ in^2}$$

NOW WE CAN SOLVE FOR ω SUCH THAT L AND t ARE DEPENDENT.

$$\sin(90^\circ - \theta/2) = \frac{D/2}{(L+t)}$$

$$(L+t) = \frac{D/2}{\sin(90^\circ - \theta/2)}$$

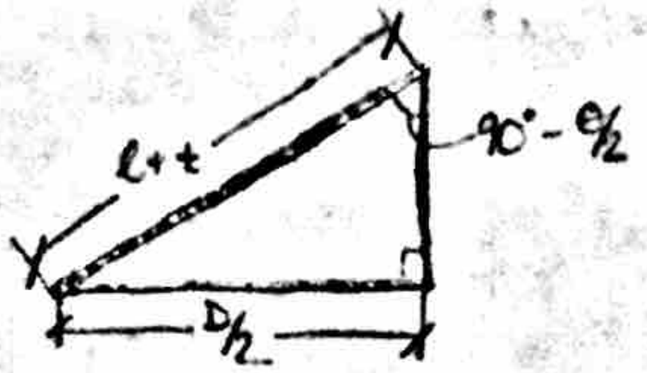

$$L = \frac{D/2}{\sin(90^\circ - \theta/2)} - t \quad (1)$$

$$\tan(\theta/2) = \frac{t}{\omega}$$

$$t = \omega \cdot \tan(\theta/2) \quad (2)$$

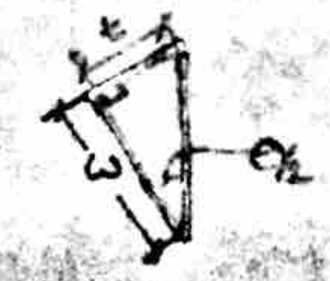

$$A_{ovr} = 2L\omega + t\omega$$

$$2L\omega = A_{ovr} - t\omega$$

$$L = \frac{A_{ovr}}{2\omega} - \frac{t}{2} \quad (3)$$

COMBINING (1), (2), AND (3) YIELDS:

$$\frac{D/2}{\sin(90^\circ - \theta/2)} - t = \frac{A_{ovr}}{2\omega} - t/2$$

$$\frac{D/2}{\sin(90^\circ - \theta/2)} = \frac{A_{ovr}}{2\omega} + \frac{t}{2}$$

$$\frac{D/2}{\sin(90^\circ - \theta/2)} = \frac{A_{ovr}}{2\omega} + \frac{\omega}{2}\tan(\theta/2)$$

THE LEFT SIDE OF THE EQUATION IS A CONSTANT, SO MATLAB WAS USED TO SOLVE ITERATIVELY FOR ω:

$$\omega_{TR} = 1.98''$$

APPENDIX N

Purpose: Determine relative hydraulic resistance for each rear duct exit. Use minor loss coefficient as predictive measure.

Assumptions: Flanged connections for large ducts, major losses insignificant

Schematic: TOP VIEW

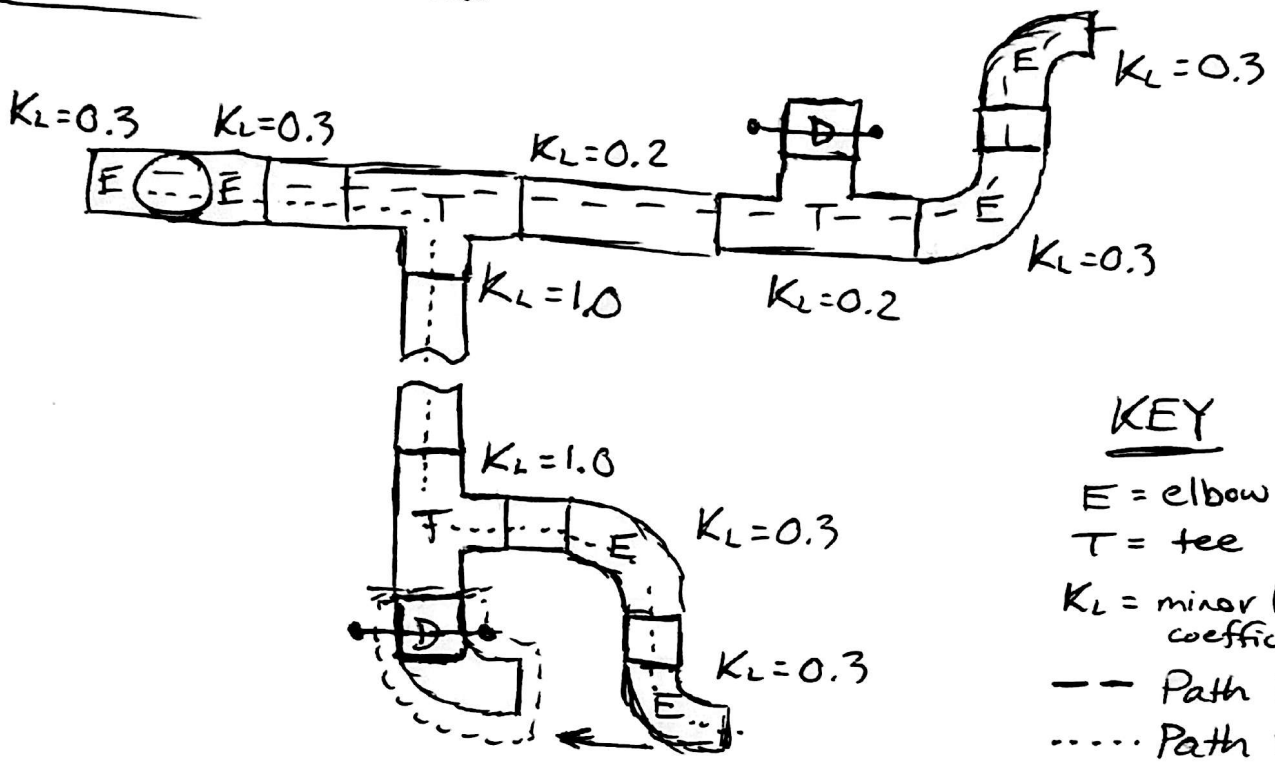

Calculation: CONFIG. 1

① $\Sigma K_{L1} = 0.3+0.3+0.2+0.2+0.3+0.3$

$\Sigma K_{L1} = 1.6$

② $\Sigma K_{L2} = 0.3+0.3+1.0+1.0+0.3+0.3$

$\Sigma K_{L2} = 3.2$

③ Ratio:

$$\frac{\Sigma K_{L2}}{\Sigma K_{L1}} = \frac{3.2}{1.6} = 2$$

ARROW INDICATES MOVING EXIT$_2$ TO DAMPER$_2$, A SWAP.

Scanned by CamScanner

APPENDIX N

Chosen Configuration

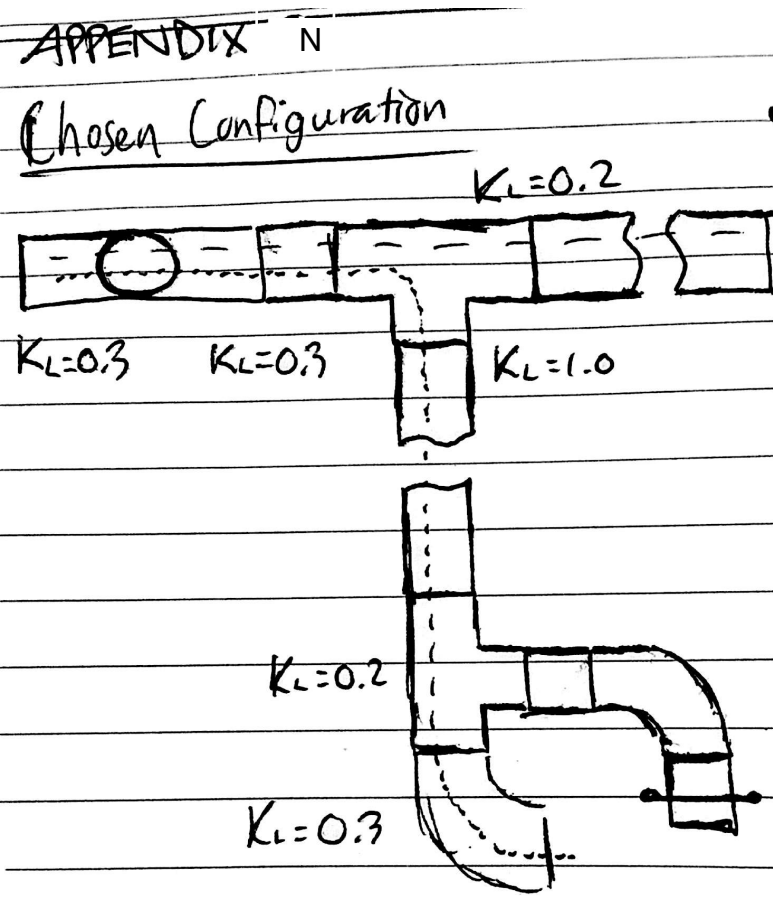

Calculation: Config. 2

① $\Sigma K_{L1} = 1.6$ (same)

② $\Sigma K_{L2} = 0.3+0.3+1.0+0.2+0.3$

$\Sigma K_{L2} = 2.1$

③ Ratio:

$$\frac{\Sigma K_{L2}}{\Sigma K_{L1}} = \frac{2.1}{1.6} = 1.3$$

Scanned by CamScanner

APPENDIX O

BILL OF MATERIALS							
	PART #	DESCRIPTION	UNITS	COST/ UNIT	TOTAL PART COST	TAX/ SHIPPING	SOURCE
BOUGHT PARTS	2002	FITTING CONNECTORS	7	$ 5.82	$ 40.74	---	MCMASTER 5078K224
	2007	90 DEGREE ELBOW	7	$ 10.83	$ 75.81	---	MCMASTER 5078K831
	2008	TEE	4	$ 26.21	$ 104.84	---	MCMASTER 5078K882
	2011	1/2-20 X 3" CAP SCREW	4	$ 0.50	$ 2.00	$ 0.16	ACE
	2012	1/2-20 WING NUT	4	$ 0.50	$ 2.00	$ 0.16	ACE
	2014	VIBRATION-DAMPING MOUNTS	8	$ 4.40	$ 35.20	---	MCMASTER 64875K62
	2015	5/16-18 X 0.75" BOLT	30	$ 0.25	$ 7.50	$ 0.60	ACE
	2016	5/16-18 OPEN-END CAP NUT	20	$ 0.25	$ 5.00	$ 0.40	ACE
	2024	5/16-18 X 1.5" BOLT	2	$ 0.25	$ 0.50	$ 0.04	ACE
	2025	5/16-18 X 2" BOLT	2	$ 0.25	$ 0.50	$ 0.04	ACE
	2018	TIE-DOWN RINGS	4	$ 19.60	$ 78.40	---	MCMASTER 3076T36
	2019	1/4-20 X 0.75" BOLT	16	$ 0.25	$ 4.00	$ 0.32	ACE
	2022	6' LONG, 2" WIDE RATCHET STRAP	2	$ 25.29	$ 50.58	---	MCMASTER 9575T523
	2023	STIHL BR700 LEAF BLOWER	2	$ 549.99	$ 1,099.98	$ 88.00	ACE
	2026	DAMPER	2	$ 44.23	$ 88.46	---	MCMASTER 1767K202
	2009	URATHANE FLEX TUBING (ID 4", 12')	1	$ 58.44	$ 58.44	---	DUCTING.COM
	---	KRYLON 12oz SATIN HUNTER GREEN PAINT	1	$ 5.99	$ 5.99	$ 0.48	ACE
	---	6.4oz 2-CYCLE ENGINE OIL	2	$ 4.59	$ 9.18	$ 0.73	ACE
	---	GASOLINE	5	$ 3.50	$ 17.50	$ 1.40	GAS STATION
	---	5-GALLON GAS CAN	1	$ 33.99	$ 33.99	$ 2.72	ACE
	---	10oz. CARTRIDGE WHITE POLYURETHANE ADHESIVE/SEALANT	1	$ 19.99	$ 19.99	$ 1.60	WEST MARINE 158485

	---	EXTRA ALUMINUM FOR WELDING PRACTICE	1	$ 25.00	$ 25.00	$ 2.00	HOME DEPOT
	---	MICRO-MARK PLASTIC BONDING SOLVENT	1	$ 16.95	$ 16.95	---	MICRO-MARK 84131
				TOTAL BOUGHT PART COST	$ 1,864.25		
RAW MATERIALS	RAW MATERIAL #	DESCRIPTION	UNITS	COST/UNIT	TOTAL PART COST	TAX/ SHIPPING	SOURCE
	1	1/4" X 2-1/4" X **24"** 6061 ALUMINUM	1	$ 8.66	$ 8.66	---	MCMASTER 8975K599
	2	1/4" X 2-1/4" X **72"** 6061 ALUMINUM	2	$ 21.11	$ 42.22	---	MCMASTER 8975K599
	3	1/4" X 18" X 18" 6061 ALUMINUM	2	$ 93.03	$ 186.06	---	MCMASTER 89155K27
	4	1/4" X 12" X 48" 6061 ALUMINUM	1	$ 82.22	$ 82.22	---	MCMASTER 9246K425
	5	2" X 2-1/2" X 36" 6061 ALUMINUM	1	$ 109.72	$ 109.72	---	MCMASTER 8975K262
	6	1/4" X 1-1/2" X 24" 1018 CARBON STEEL	1	$ 12.56	$ 12.56	---	MCMASTER 8910K553
	7	4" ID X 24" GALVANIZED STEEL CRUSH RESISTANT SPIRAL DUCT	4	$ 10.09	$ 40.36	---	MCMASTER 5078K811
				TOTAL RAW MATERIAL COST	$ 481.80		

TOTAL COST	$ 2,346.05

TEST PLAN										TEST REPORT			
Item No	Specification or Clause Reference	Test Description	Acceptance Criteria	Test Responsibility	Test Stage	SAMPLES		TIMING		TEST RESULTS			NOTES
						Quantity	Type	Start date	Finish date	Test Result	Quantity Pass	Quantity Fail	
1	Nozzle design choice	Test 3D-printed nozzles, use to estimate performance of full-scale nozzle.	None	Both	CV	3/nozzle	A	1/10/2017	1/24/2017	Triangular Duct better distributes flow	1	0	Qualitative Test
2	Operating time has a max limit of 90 minutes	Run completed system along the track for cleaning purposes. Compare measured operating time with old blower system.	Entire track is clear of leaves < 90 minutes	Both	PV	1	C	May	May				
3	Maximum number of full passes less than or equal to 2	Run competed system along the track for cleaning purposes. Compare with old blower system's number of passes.	Entire track is clear of leaves in < 3 passes	Both	PV	1	C	May	May				
4	Functions can be operated by older volunteers	Have the volunteers attempt to install and remove the system.	Successful installation and removal	Both	PV	1	C	April	April				
5	Airflow cannot blow ballast over rails	Two tests for complete blower system. 1.On a completed test track to simulate track conditions in San Luis Obispo to complete a nozzle design. 2. At the ranch itself in order to guarantee that ballast does not move during operation.	No ballast lost from between the track to outside of the track	Both	DV PV	10 Dry 5 Wet Over 10 ft of track	B C	Feb	March				
6	Force to actuate any mechanisms remains under 20 lbf	Use force guage to measure force necessary to actuate mechanisms that will be operated by an individual.	Measured pushing force < 20 lbf	Both	DV	20	B	April	April				
7	Nozzle-track clearance	Test spring/damper compression to ensure that the nozzle doesn't hit the track. DO NOT USE ACTUAL NOZZLE.	Minimum clearance of 0.5 inches	Both	DV	10	B	April	April				

APPENDIX Q

Step #	Qualitative Test Procedure
1	Assemble flexible blower, flexible ducting, front ducting and nozzles.
2	Wear safety goggles and ear plugs.
3	Ensure blower has proper fuel-oil mixture.
4	With Dustin holding ducting assembly, Jakob pull-start blower. Throttle to about 75%.
5	Jakob wear blower on back.
6	Jakob take ducting from Dustin, if possible. If not, work together to find a way to walk at the same pace.
7	Walk along track at slow walking pace with nozzle approximately 1 inch from ballast surface.
8	Record observations of how much ballast is blown out from between the rails. If necessary, transfer removed ballast into a bucket to give a rough estimate how much was removed.
9	If results indicate a lower percent throttle should be utilized, reduce throttle and repeat steps 7-8.

Step #	Quantitative Test Procedure
1	Repeat steps 1-6 of qualitative test, with roles reversed.
2	Jakob take a measurement using pitot tube at left, left-center, center, right, and right-center of the left nozzle exit for 75% throttle.
3	Jakob take a measurement using pitot tube at left, left-center, center, right, and right-center of the right nozzle exit for 75% throttle.
4	Repeat steps 2-3 of quantitative test for 50% throttle.
5	Repeat steps 2-3 of quantitative test for 100% throttle.

APPENDIX R

Table R1. Raw Pitot-Static Differential Pressure Data

Pitot tube location (see schematic)	Percent Throttle, Left Nozzle			Percent Throttle, Right Nozzle		
	50%	75%	100%	50%	75%	100%
1	0.27	0.66	0.83	0.57	1.50	1.90
2	0.25	0.58	0.76	0.56	1.50	1.20
3	0.44	0.71	0.96	0.56	0.99	1.20
4	0.71	0.74	0.94	0.32	0.72	0.65
5	1.00	2.30	2.20	0.32	0.85	0.74
*All measurements have units inH20						

Table R2. Conversion Factors

Gravity [ft/s^2]	Density of Water [slugs/ft^3]	Density of Air [slugs/ft^3]
32.174	1.940	0.0023769

Velocity Calculation: $$v = \sqrt{2g\Delta P \frac{\rho_{water}}{\rho_{air}} \frac{12\ in}{1\ ft}}$$

Table R3. Calculated Velocities

Pitot tube location (see schematic)	Percent Throttle, Left Nozzle			Percent Throttle, Right Nozzle		
	50%	75%	100%	50%	75%	100%
1	413	645	723	599	972	1094
2	397	605	692	594	972	870
3	527	669	778	594	790	870
4	669	683	770	449	674	640
5	794	1204	1178	449	732	683
*All measurements have units in/s						

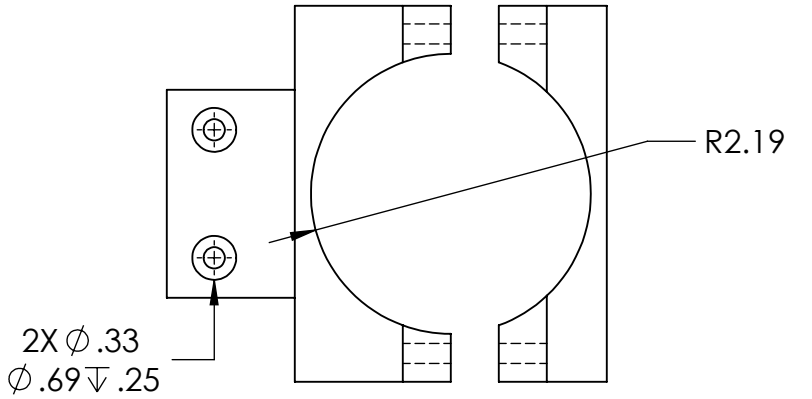

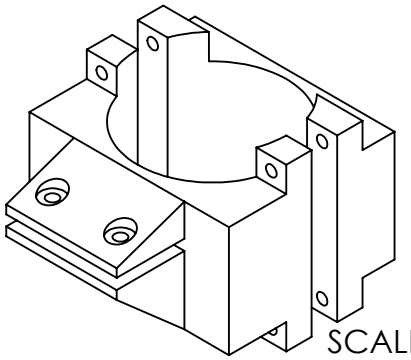

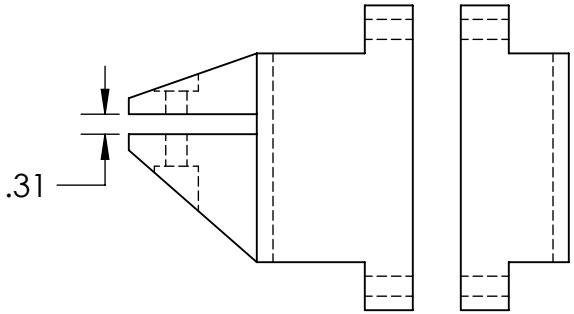

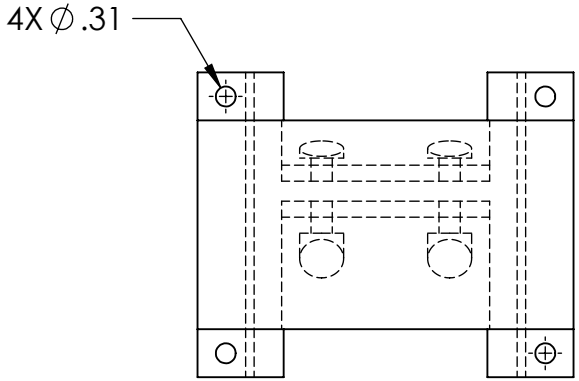

NOTE: THIS PART IS BEING 3D PRINTED WITH ABS PLASTIC. NO DIMENSIONING IS NECCESSARY PAST DEFINING CERTAIN KEY ASPECTS FOR REFERENCE PURPOSES.

SOLIDWORKS Educational Product. For Instructional Use Only

UNLESS OTHERWISE SPECIFIED:		NAME	DATE
DIMENSIONS ARE IN INCHES TOLERANCES: FRACTIONAL ± ANGULAR: MACH ± BEND ± TWO PLACE DECIMAL ±.01 THREE PLACE DECIMAL ±.005	DRAWN	D. PLATT	02/05/17
	CHECKED		
	ENG APPR.		
	MFG APPR.		
INTERPRET GEOMETRIC TOLERANCING PER:	Q.A.		
MATERIAL ABS PLASTIC	COMMENTS:		
FINISH			
DO NOT SCALE DRAWING			

TITLE:

VERTICAL PIPE MOUNT - REDESIGN

SIZE	DWG. NO.	REV
A	2026	

SCALE: 1:3	WEIGHT:	SHEET 1 OF 1

TEAM CONTRACT

Mission Statement:

The mission of the **Track B&B** is to modify an existing railroad maintenance platform in accordance with the needs of Swanton Pacific Railroad.

Section 1—Name

A. This organization shall be known as **Track B&B (Brush and Blow)** .

Section 2—Membership

A. Members of the team include **Alec Boyer, Dustin Platt, and Jakob Graf**
B. No member shall purport to represent the team unless so authorized by the team.
C. Each member shall be provided a copy of the team contract.
D. Officers of the team shall include those listed below with their designated responsibilities. (spell out specific responsibilities of each officer position, some suggestions below).
   1. Communications Officer: **Dustin Platt**
      a. Be main point of communication with sponsor
      b. Facilitate meetings with Sponsor
      c. Facilitate communications with the other Swanton Pacific Railroad team
   2. Team Treasurer: **Jakob Graf**
      a. Maintain team's travel budget
      b. Maintain team's materials budget (in 2nd quarter)
   3. Secretary/Recorder: **Alec Boyer**
      a. Maintain information repository for team (e.g. team binder, google docs site, etc..)
      b. Maintain brief meeting minutes

Section 3—Decision Making

A. By Consensus
B. Third-Party (lab advisor) Opinion (if consensus is not reached)
C. Majority vote (if third-party opinion is unable to bring us to consensus)

Section 4—Team Interactions

A. All affairs of the team shall be governed by polite group discussion, unless otherwise specified.
B. Meetings shall be held when convenient, before Thursdays, at least once per week.
C. Unless otherwise noticed, all meetings will be held at the library.
D. Special meetings of the team may be called by anyone using the text messaging group chat.
E. Attendance is mandatory unless an approved excuse.
F. Meeting discussions will be conducted in a conversational format with special regard for a dialogue that is respectful and considerate of all members in attendance.
G. A meeting agenda will be started in the prior weekly meeting and added to as the week progresses.
H. The length of meetings shall be stated in advance.
I. All team members are expected to be punctual (Polytime).
J. Meeting time notices shall be distributed not less than 1 day before the meeting date.
K. Missing team meetings will be frowned upon.
L. Violation of team rules will result in invocation of the "Cookie Rule."
M. The "Cookie Rule" is defined as bringing all group mates good cookies to the next meeting.

Adapted from the IDEALS Teamwork Planning module
Copyright ©2010 Integrated Design Engineering Assessment and Learning System (IDEALS). May be used for instruction if proper credit is given.

Section 5—Conflict Resolution

A. In the event of a design disagreement, each opposing party will present their position respectfully.
B. Meetings regarding disagreement may be held as needed, organized through our group chat.
C. If the group cannot come to a consensus, we will consult our lab advisor for an unbiased third-party opinion.

Section 6—Amendments

A. Come to a consensus and add pages if necessary.

Section 7—Effective Date

A. This contract of the **Track B&B** team shall become effective on October 5, 2016.
B. Dates of amendment must be recorded in minutes of meetings at which amendments were approved, together with a revised set of bylaws.

Section —Signatures

Adapted from the IDEALS Teamwork Planning module
Copyright ©2010 Integrated Design Engineering Assessment and Learning System (IDEALS). May be used for instruction if proper credit is given.

ID	Task Mode	Task Name	Duration	Start	Finish
1		**Background research**	**14 days**	**Mon 10/3/16**	**Thu 10/20/16**
6		**Quality Function Deployment (QFD)**	**2 days**	**Fri 10/21/16**	**Mon 10/24/16**
11		**Develop Project Proposal**	**17 days**	**Wed 10/5/16**	**Thu 10/27/16**
27		**Idea Generation**	**7.38 days**	**Wed 10/26/16**	**Fri 11/4/16**
35		**Narrow down design options**	**4 days**	**Fri 11/4/16**	**Thu 11/10/16**
43		**Prepare for PDR**	**7.13 days**	**Fri 11/4/16**	**Tue 11/15/16**
50		PDR	0 days	Fri 11/18/16	Fri 11/18/16
51		**Reevaluate our concept**	**21 days**	**Tue 11/15/16**	**Wed 1/11/17**
59		**Analysis**	**11 days**	**Fri 11/18/16**	**Fri 12/9/16**
74		**Design**	**5 days**	**Mon 12/12/16**	**Fri 12/16/16**
83		**Prototype**	**12 days**	**Mon 1/9/17**	**Tue 1/24/17**
88		**Prepare for CDR**	**21 days**	**Wed 1/25/17**	**Thu 2/23/17**
96		Update Test Plan	1 day	Thu 2/23/17	Thu 2/23/17
97		**Operator's Manual**	**10 days**	**Thu 2/23/17**	**Wed 3/8/17**
100		**Project Update Report**	**40 days**	**Thu 2/23/17**	**Wed 5/10/17**
105		Project Update Report	0 days	Thu 3/16/17	Thu 3/16/17
106		**Purchase**	**43 days**	**Thu 2/23/17**	**Mon 5/15/17**
107		Submit Purchase order to BRAE dept	1 day	Thu 2/23/17	Thu 2/23/17
108		Collect online purchased materials	10 days	Fri 2/24/17	Thu 3/9/17
109		Purchase hardware from ACE	1 day	Thu 4/27/17	Thu 4/27/17
110		Purchase 2nd Leaf Blower	3 days	Thu 5/11/17	Mon 5/15/17

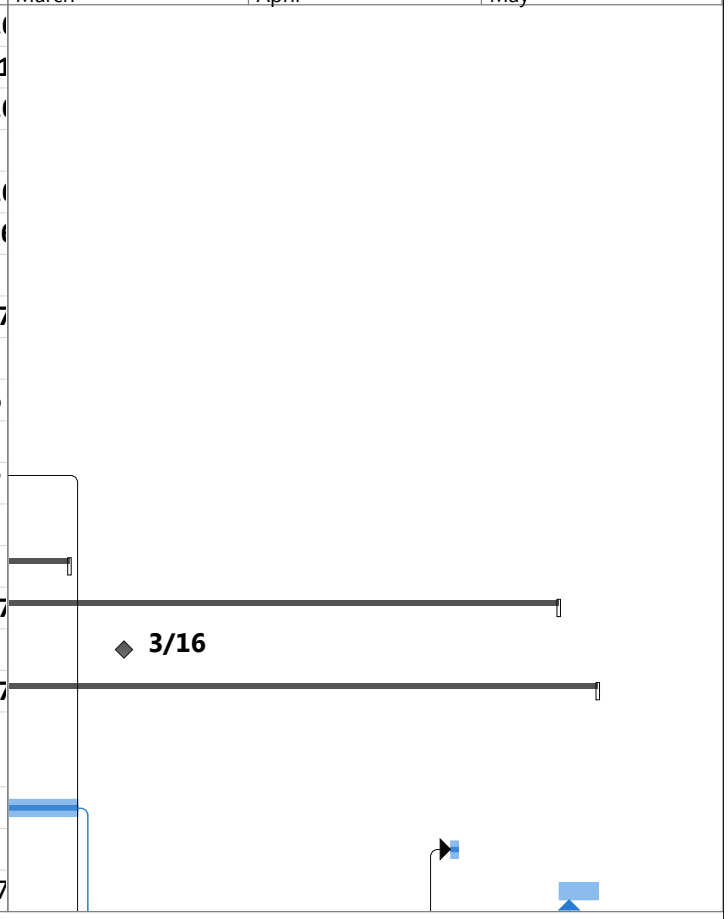

Project: Senior_Project_Gantt.m
Date: Fri 6/2/17

Task	Inactive Summary	External Tasks
Split	Manual Task	External Milestone
Milestone	Duration-only	Deadline
Summary	Manual Summary Rollup	Progress
Project Summary	Manual Summary	Manual Progress
Inactive Task	Start-only	
Inactive Milestone	Finish-only	

ID	Task Mode	Task Name	Duration	Start	Finish
111		**Build**	**121 days**	**Mon 10/3/16**	**Mon 5/8/17**
112		**Manufacture Parts**	**111 days**	**Mon 10/3/16**	**Mon 4/24/17**
113		Schedule time to 3D print	5 days	Fri 3/10/17	Thu 3/16/17
114		3D Print nozzle	2 days	Fri 3/17/17	Mon 4/10/17
115		Cut four 12", one 16", and two 6" straight ducting lengths	1 day	Fri 3/10/17	Fri 3/10/17
116		Cut four locator plates	1 day	Mon 3/13/17	Mon 3/13/17
117		**Machining for shelf interface**	**4 days**	**Fri 3/10/17**	**Wed 3/15/17**
120		**Machining for mounting strips**	**2 days**	**Fri 3/10/17**	**Mon 3/13/17**
123		3D Print vertical pipe mount	1 day	Mon 10/3/16	Mon 10/3/16
124		Machine AL safety block (2x)	10 days	Tue 4/11/17	Mon 4/24/17
125		**Machining for base plates (2x)**	**101 days**	**Mon 10/3/16**	**Mon 4/10/17**
130		Cut side walls (4x)	1 day	Fri 3/17/17	Fri 3/17/17
131		**Tie down walls**	**0 days**	**Mon 3/20/17**	**Wed 3/22/17**
135		**Welding**	**19 days**	**Mon 4/10/17**	**Thu 5/4/17**
136		**Weld base assemblies (2x)**	**18 days**	**Mon 4/10/17**	**Wed 5/3/17**
140		**Weld shelf interface assembly**	**1 day**	**Thu 5/4/17**	**Thu 5/4/17**
142		**Assembly**	**3 days**	**Thu 5/4/17**	**Mon 5/8/17**
143		Base Assembly	2 days	Thu 5/4/17	Fri 5/5/17
144		Shelf Interface Assembly	2 days	Fri 5/5/17	Mon 5/8/17
145		**Testing**	**125.5 days**	**Mon 10/3/16**	**Mon 5/15/17**
146		Gather track materials	25 days	Thu 2/23/17	Wed 4/19/17

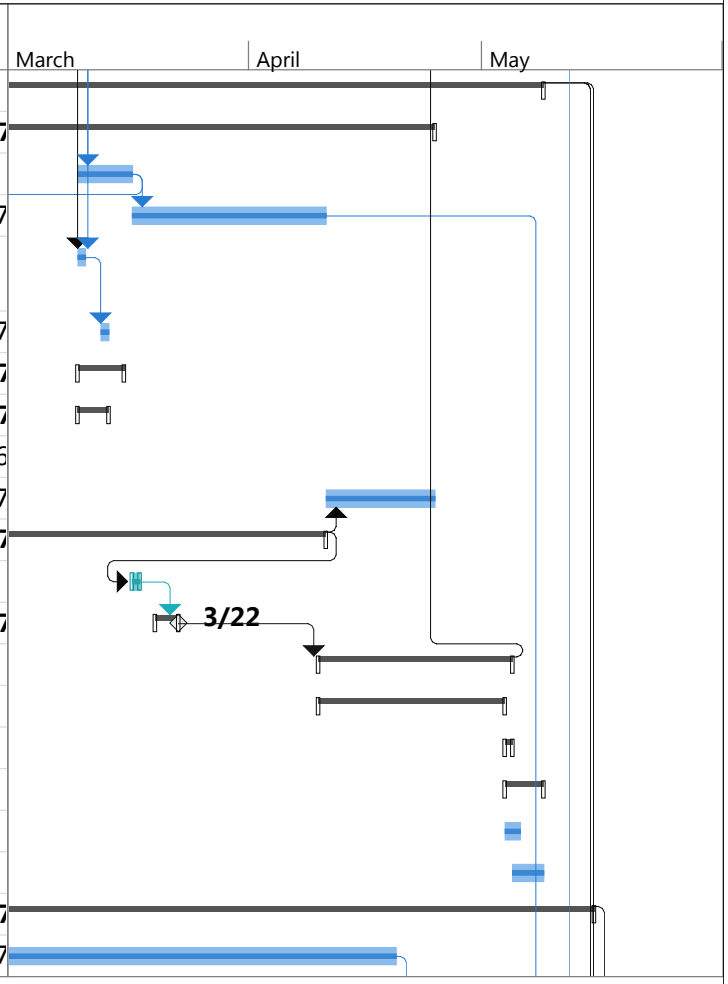

Project: Senior_Project_Gantt.m
Date: Fri 6/2/17

Task	Inactive Summary	External Tasks
Split	Manual Task	External Milestone
Milestone	Duration-only	Deadline
Summary	Manual Summary Rollup	Progress
Project Summary	Manual Summary	Manual Progress
Inactive Task	Start-only	
Inactive Milestone	Finish-only	

ID	Task Mode	Task Name	Duration	Start	Finish
147		Build track model in SLO	12 days	Thu 4/20/17	Fri 5/5/17
148		Develop data tables for tests	2 days	Mon 5/8/17	Tue 5/9/17
149		Set up a date to test in Santa Cruz	3 days	Wed 5/10/17	Fri 5/12/17
150		**Test Plan**	**125.5 days**	**Mon 10/3/16**	**Mon 5/15/17**
151		Nozzle Design Choice Test	2 days	Mon 4/17/17	Tue 4/18/17
152		Airflow to blow ballast Test	3 days	Mon 5/8/17	Wed 5/10/17
153		Operating Time Test	2 hrs	Mon 5/15/17	Mon 5/15/17
154		Number of Passes Test	2 hrs	Mon 5/15/17	Mon 5/15/17
155		Force to Actuate Mechanisms Test	1 hr	Wed 5/10/17	Wed 5/10/17
156		Nozzle Track-Clearance Test	1 hr	Mon 10/3/16	Mon 10/3/16
157		Functions operable by volunteers Test	1 hr	Mon 5/15/17	Mon 5/15/17
158		**FDR**	**5 days**	**Mon 5/15/17**	**Mon 5/22/17**
159		Update CDR Report	3 days	Mon 5/15/17	Thu 5/18/17
160		Prepare presentation board	5 days	Mon 5/15/17	Mon 5/22/17
161		Prepare powerpoint	5 days	Mon 5/15/17	Mon 5/22/17
162		Prepare verbal presentation	5 days	Mon 5/15/17	Mon 5/22/17
163		Project Hardware/Safety Demo	0 days	Tue 5/2/17	Tue 5/2/17
164		Senior Project Expo	0 days	Fri 6/2/17	Fri 6/2/17

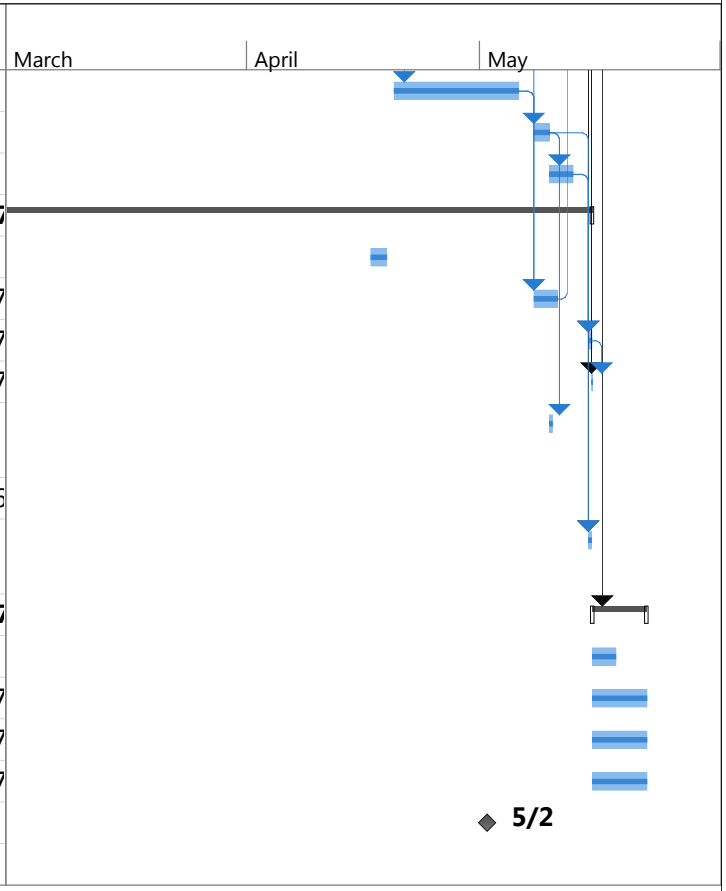

Project: Senior_Project_Gantt.m
Date: Fri 6/2/17

Task	Inactive Summary	External Tasks
Split	Manual Task	External Milestone
Milestone	Duration-only	Deadline
Summary	Manual Summary Rollup	Progress
Project Summary	Manual Summary	Manual Progress
Inactive Task	Start-only	
Inactive Milestone	Finish-only	

APPENDIX V

Materials Budget for Senior Project

Title of Senior Project:	Track B&B (48)
Team members:	Dustin Platt, Jakob Graf
Designated Team Treasurer:	Jakob Graf
Faculty Advisor:	Eileen Rossman
Sponsor:	Charlie Crabb
Quarter and year project began:	Fall 2016
Materials budget given for this project:	**$2,500.00**

Date purchased	Vendor	Description of items purchased	Total expense
01/25/17	ACE Hardware Grover Beach	Stihl BR700 Leafblower	$ 594.00
02/27/17	McMaster	Raw Materials	$ 1,090.16
02/27/17	McMaster	Ducting (fittings, dampers)	Total McMaster Order
02/27/17	McMaster	Vibration Damping Mounts	
02/27/17	McMaster	Ratchet Straps	
02/27/17	McMaster	Tie-Down Rings	
02/27/17	West Marine	Polyurethane Sealant	$ 29.00
02/27/17	Ducting.com	Urethane Flexible Tubing, 12 feet	$ 58.44
05/10/17	Miner's ACE Hardware SLO	Stihl Motomix, Green Spray Paint, Weather Strips	$ 40.92
05/03/17	Miner's ACE Hardware SLO	Fasteners, Cable ties	$ 10.11
05/03/17	Miner's ACE Hardware SLO	Fasteners	$ 1.03
05/03/17	Miner's ACE Hardware SLO	Fasteners	$ 2.52
05/07/17	Miner's ACE Hardware SLO	Fasteners, Hose clamps, Cambuckle	$ 45.79
04/29/17	Miner's ACE Hardware SLO	Fasteners, super glue, acetone, paintbrush	$ 39.53
		Total expenses:	$ 1,911.50
		Budget:	$ 2,500.00
		Actual expenses:	$ 1,911.50
		Remaining balance:	$ 588.50

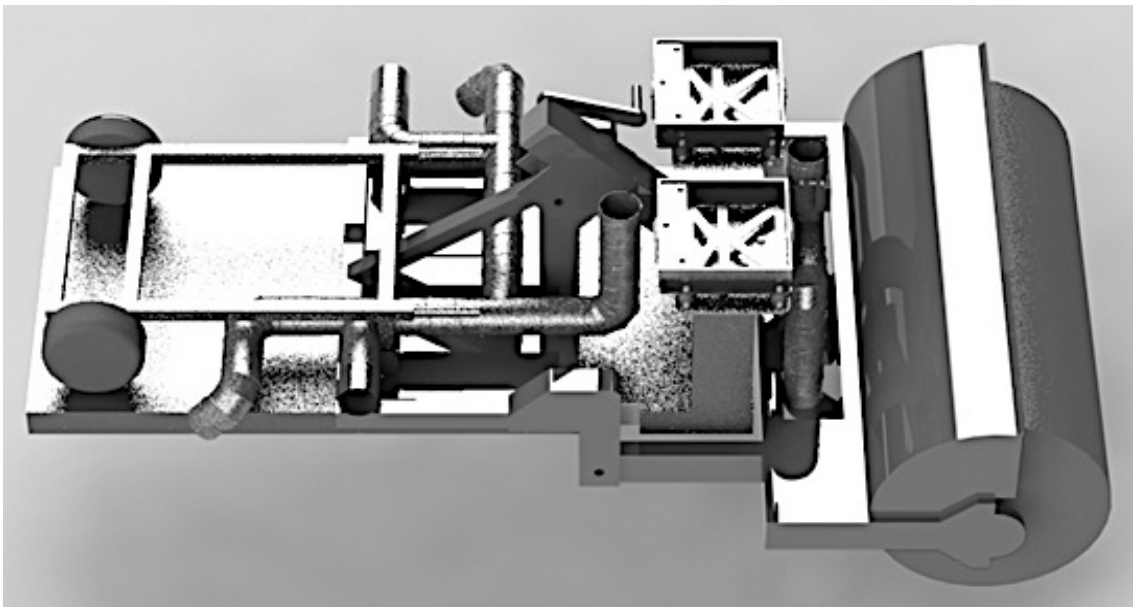

Upgraded Track Maintainer Blower System

User Manual
March 2017

Warning	Read user manual thoroughly before use and follow all safety precautions. Improper use may result in serious injury.

Contents

Overview	3
Shelf Interface Assembly and Mounting	4
Blower Base Assembly and Mounting	6
Mounting Leaf Blower	7
Operating Instructions	10
Storage	10
Highlighted Warnings	11
Other Important Notes	11
Stihl BR700 User Manual Contents	12

APPENDIX W

Blower System Manual

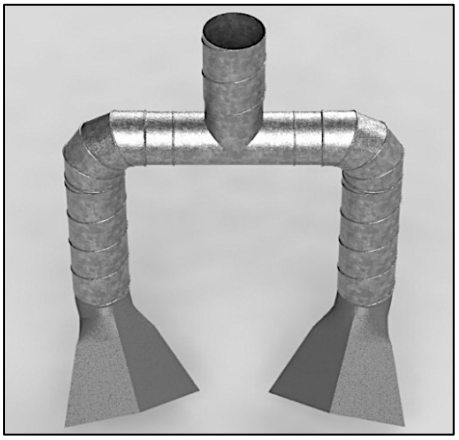

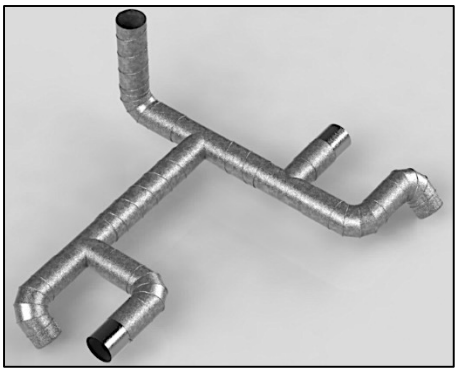

Overview

The upgraded track maintainer has separate blower systems drawing air from two Stihl BR700 leaf blowers. The front blower system is designed to blow leaves out over the rails. The rear blower system is designed to blow leaves on the periphery further from the track.

The front blower system consists of a single backpack leaf blower expelling air through a multi-nozzle exit. The vertical sections of ducting fit in the gap in the brush frame. Nozzles are located at track level below the brush, and may be rotated to the desired angle.

The rear blower system consists of a single backpack leaf blower expelling air through a variable-exit ducting network. During operation, two exits will be open. When passerby walk next to the cart, two additional exits may be opened to reduce the exit velocity.

Shelf Interface Assembly and Mounting

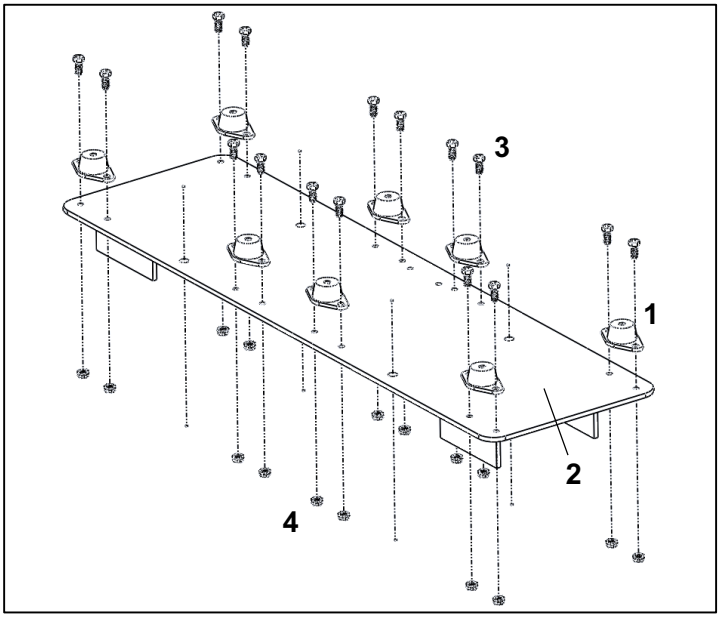

- Mount 8x vibrational dampers (1) to the shelf interface (2) via two 5/16”-18 bolts (3) and two 5/16”-18 nuts (4) per vibrational mount. Attach where indicated.

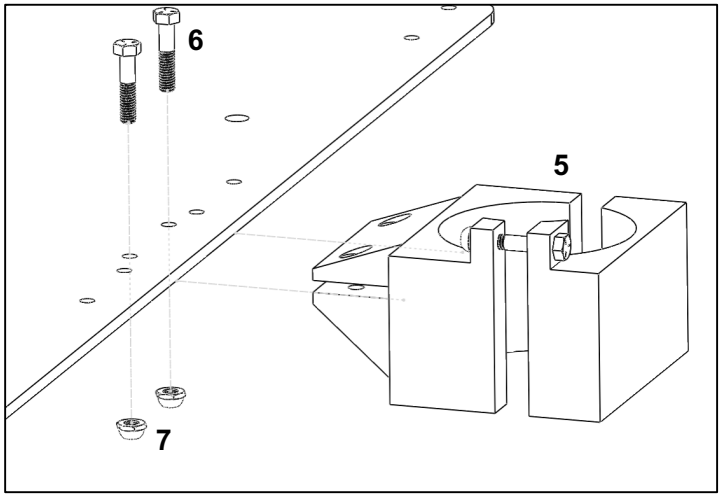

- Attach 3D printed ducting clamp (5) to the shelf interface using two 5/16”-18 bolts (6) and 5/16”-18 nuts (7).

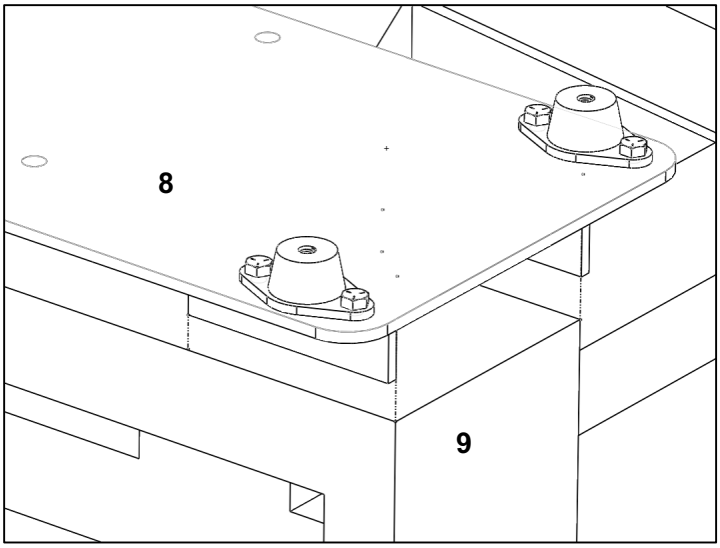

- Lower shelf interface (8) onto shelf (9) (such that the bottom plates are aligned with the shelf) and center.

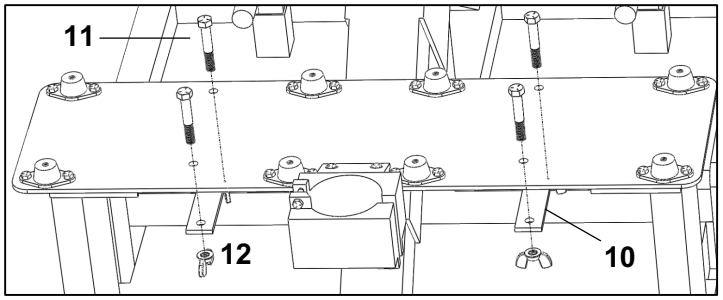

- Tighten shelf interface to the shelf using two steel mounting strips (10) and (per strip) two 1/2"-20 bolts (11) and 1/2"-20 wing nuts (12).

Blower Base Assembly and Mounting

- Procedure listed should be repeated for both blower base assemblies

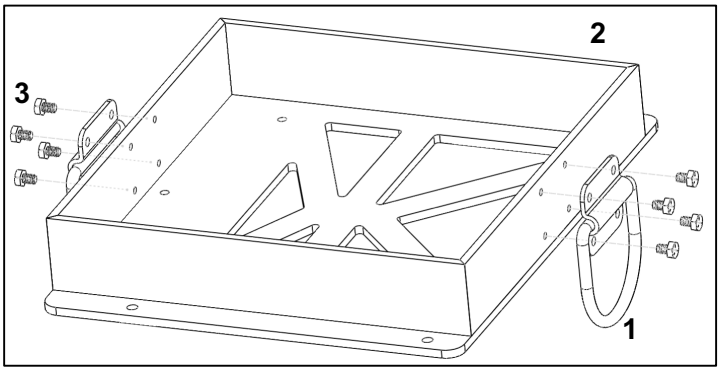

- Attach tie-down rings (1) to the blower base (2) via four tapped holes on the front and back walls of the blower base assembly. Use four 1/4"-20x3/8” bolts (3) per tie-down ring.

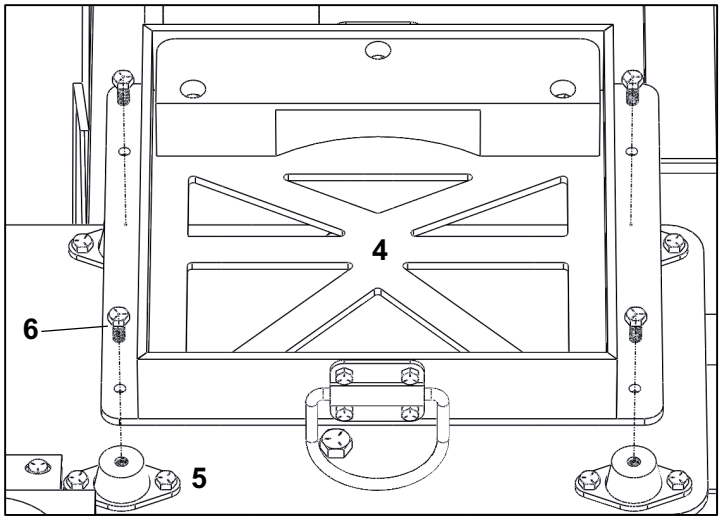

- Attach the blower base (4) to the shelf interface via the vibrational dampers (5) using four 5/16”-18 bolts (6). The vibrational dampers are threaded in the center. Be sure to align the blower base assembly such that the arrow formed by the three holes inside the wall point towards the back of the cart.

Mounting Leaf Blower

- Follow procedure in reverse to remove leaf blower.

- Place leaf blower in the blower base assembly. Base of the leaf blower will fit within the bounds of the blower base assembly walls.
- For the rear ducting assembly, place the leaf blower in the right blower base (from front) with the pull-cord facing away from you.
- For the front ducting assembly, place the leaf blower in the left blower base (from front) with the pull chord facing towards you.

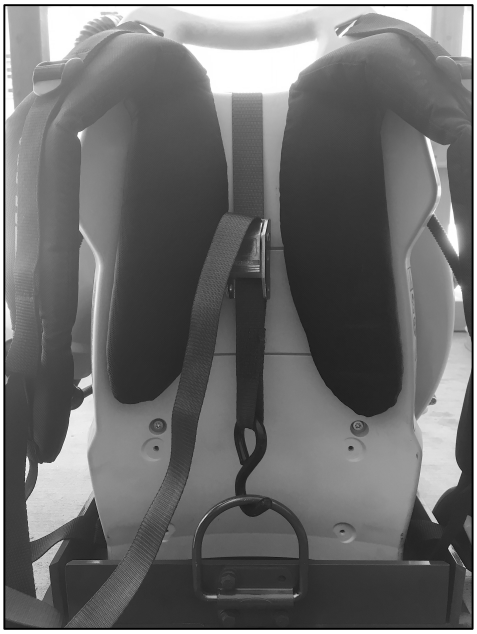

- Run cambuckle strap through top handle of the leaf blower, being sure clasp is opposite the pull chord.
- Attach hooks of cambuckle to the tie down rings and tighten cambuckle to a reasonable level.

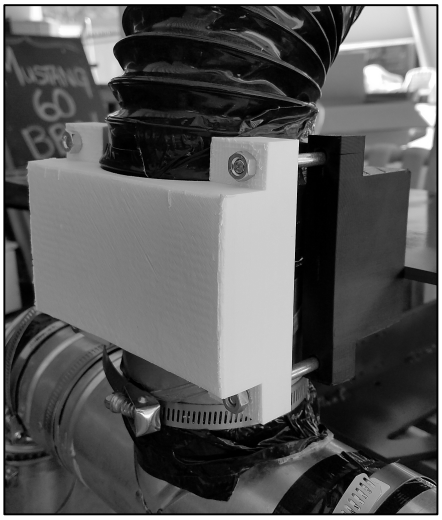

- Mount front ducting assembly (if removed) in the clamp on the front of the shelf interface by first removing the four 5/16”-18 bolts holding the part together. The hose clamp on the front ducting assembly should lie at the bottom of the 3D printed clamp.
- Re-insert bolts and tighten until snug.

- Insert adapter of flexible joint for either the rear or front ducting assemblies into the leaf blower's rotating elbow. The adapter should be pushed in until snug.
- Tighten padded hose clamp around the leaf blower's rotating elbow.

Operating Instructions

Warning	When rear ducting system is in use, a passerby might be in direct line with projectiles expelled by blower. To reduce the risk of projectile injury, hold open the dampers when walking alongside cart.

Damper closed Damper open

- Run front and rear blower systems separately.
- When running, set throttle to about 75%.
- Turn on front blower (left side) to blow leaves out from between track rails.
- Turn on rear blower (right side) to blow leaves on the periphery further away from the track.
- The leaf blowers use a full tank of gas during approximately 45 minutes run time at 75% throttle.

Storage

- To reduce the risk of the aluminum components weathering and the steel components rusting, store upgraded blower system indoors in a dry place.
- If possible, wipe dry any visibly-wet components before storage.
- See warnings on next page.

APPENDIX W

Highlighted Warnings from Stihl BR700 User Manual

Warning	Leaf blower noise may damage hearing. To reduce the risk of hearing loss, wear ear plugs or ear mufflers.
Warning	To reduce the risk of injury to eyes, never operate blower unless wearing proper eye protection. Safety glasses recommended.
Warning	Stihl BR700 must be stored in a dry location, preferably indoors, to protect from weathering.
Warning	Before storing for months at a time, run the engine until the carburetor is dry. This helps with longevity of carburetor.
Warning	Fuel leaf blower in well-ventilated area, outdoors. Always shut off engine and allow it to cool before refueling. Wipe off spilled fuel before starting leaf blower. If possible, start engine at least 10 feet from fueling spot.

Other Important Notes

- See BR700 manual pages 2-10 for full warnings list.
- For reassembly of Stihl BR700 for its intended purpose, see BR700 manual page 11.
- For maintenance, see BR700 manual page 28.

11

Stihl BR700 User Manual Contents

Contents

Guide to Using this Manual	2
Safety Precautions and Working Techniques	2
Assembling the Unit	11
Adjusting the Throttle Cable	13
Fitting the Harness	13
Fuel	14
Fueling	15
Winter Operation	16
Information Before You Start	16
Starting / Stopping the Engine	17
Operating Instructions	19
Replacing the Air Filter	19
Engine Management	20
Adjusting the Carburetor	20
Spark Plug	21
Spark Arresting Screen in Muffler	22
Storing the Machine	22
Inspections and Maintenance by Dealer	23
Maintenance and Care	24
Main Parts	26
Specifications	27
Maintenance and Repairs	28
Disposal	28
STIHL Incorporated Federal Emission Control Warranty Statement	29
STIHL Incorporated California Exhaust and Evaporative Emissions Control Warranty Statement	31