ENERGY GENERATOR EXPLORATION STATION

SENIOR PROJECT REPORT

"Children Make the Future"

Evan Carr
(evancarr919@gmail.com)
Chris Scharff
(cscharff@calpoly.edu)
Andrea Govea
(agovea@calpoly.edu)

Advisor: Lee McFarland

Submitted: June 11, 2014

STATEMENT OF DISCLAIMER

Since this project is a result of a class assignment, it has been graded and accepted as fulfillment of the course requirements. Acceptance does not imply technical accuracy or reliability. Any use of information in this report is done at the risk of the user. These risks may include catastrophic failure of the device or infringement of patent or copyright laws. California Polytechnic State University at San Luis Obispo and its staff cannot be held liable for any use or misuse of the project.

TABLE OF CONTENTS

Statement of Disclaimer 2
Table of Contents 3
List of Figures 5
List of Figures 6
List of Tables 7
Executive Summary 8
Chapter 1: Introduction 9
Preliminary List of Requirements: 9
Chapter 2: Background 11
Chapter 3: Design Development 13
Conceptual Design Process 13
Final Design Selection 13
Chapter 4: Final Design 16
The Frame 17
Pedal Assembly 21
Display Board 22
Electronics 23
Safety 26
Cost Analysis 26
Maintenance 27
Chapter 5: Product Realization 28
Chapter 6: Design Verification & Testing 30
Chapter 7: Conclusions and Recommendations 31
References 32

TABLE OF CONTENTS

Appendices..... 33

Appendix A: QFD, Engineering Requirements, Conceptual Designs, Decision Matrix

Appendix B: Drawing Packet

Appendix C: List of Vendors and contact information

Appendix D: Vendor supplied Component Specifications and Data Sheets

Appendix E: Detailed Supporting Analysis, DVPR

Appendix F: Gantt Chart

Appendix G: Maintenance

LIST OF FIGURES

Figure 1 – Pedal-powered battery charger available from Firefly Solar 11

Figure 2 – Pedal-powered energy generator exhibit, SF 11

Figure 3 – Top ideas for pedal generation designs 14

Figure 4 – Preliminary design for Energy Truck Exhibit 15

Figure 5 – Final exhibit 16

Figure 6 – Final model of exhibit design 17

Figure 7 – Final model of exhibit frame without display 18

Figure 8 – Front section of truck frame 19

Figure 9 – Back section of truck frame 19

Figure 10 – Side view of exhibit without display 19

Figure 11 – T-slot aluminum extrusion 20

Figure 12 – Model of frame joint 20

Figure 13 – Isolated display of pedal assembly without roller chain 21

Figure 14 – Two views of the display when attached to the exhibit 22

Figure 15 – Front and Side view of part of the electrical system including base load led, custom regulator, generator, and terminal block 23

Figure 16 – WindTura 750, 3-phase AC permanent magnet alternator..... 24

Figure 17 – Custom regulator, with 3-phase AC input at bottom fuses, DC output at top fuse, and AC-to-DC rectifier at far left 24

Figure 18 – Wiring to toggle switches on dashboard 25

Figure 19 – Close up view of terminal block, with the left side going to the switches on the dashboard and the right side going to the display 25

Figure 20 – Close up of box and separating acrylic panel 26

Figure 21 – Exhibit with hinged panels unlocked and open 26

LIST OF FIGURES

Figure 22 – Detailed image of acrylic box removal 27

Figure 23 – Radial pin for shaft-hub connection 29

Figure 24:55 – Maintenance guide .....Appendix G

LIST OF TABLES

Table 1 – Formal Engineering Requirements and Specifications 10

Table 2 – Results of child pedaling test 30

EXECUTIVE SUMMARY

The mission of Team EnGen is to create a safe and reliable, human powered energy generation system for the Exploration Station. This project was proposed by the Exploration Station in response to a grant received by Pacific Gas and Electric (PG&E) that allocated funds for an energy conservation exhibit. This system will take the form of a model energy truck and a darkened neighborhood display that the user powers through peddling, turning the generator to create the electricity that will light up the display. The Exploration Station and Team EnGen agree that this style of design is accessible to all ages as well as enriching and informative to the user while maintaining a play-like feel. It is important that this new exhibit express the ideals of both Cal Poly and the Exploration Station in a positive way.

CHAPTER 1: INTRODUCTION

The Exploration Station (ES) is a non-profit public benefit facility established in 2001 that is "dedicated to providing the youth in our community a facility for positive social and educational experiences." (Exploration Station, About Us) For over 10 years, the ES has provided various science-based programs and activities that "encourage cooperation and mutual learning between adults and youth" (About Us) and "connecting our community through science and technology, inspiring people of all ages to enjoy and embrace science in order to better understand our world." (Our Mission)

PG&E has given a grant to the Exploration Station to create a classic "generator bike" demonstration. This exhibit would allow the user to power a generator by pedaling a stationary bike. They would be able to select different loads that are efficient or inefficient, for instance LED vs. incandescent lights, and feel the difference in power required. These exhibits also give an appreciation of how much energy is required to power a small load that one might take for granted as an exercise in energy conservation. This type of exhibit would complement the currently installed wind turbine interactive exhibit and a planned solar energy exhibit.

A generator-bike exhibit would provide a kinesthetic learning opportunity where participants can truly internalize the energy required for various electrical loads. The exhibit would also emphasize the importance of conservation. In this way we believe it clearly meets the Educational and Environmental Stewardship goals for PG&E investment.

PRELIMINARY LIST OF REQUIREMENTS:

1. Meets our $2500 grant budget
2. Is rock solid reliable
3. Provides realistic force feedback to the user based on the load selected as stated in the grant application.

(Cal Poly ME Senior Design Project Proposal #10: Kid Powered Energy Generator)

Given these three very simple conditions, the team set about creating a formal list of engineering specifications. Several meetings with the ES provided a guideline for a more technical set of requirements. Table 1 below shows the engineering specifications as well as target parameters of said specifications. This table assesses the feasibility of meeting the main engineering requirements of the project. Each parameter is listed along with the target value and tolerance when applicable. The predicted the risk of accomplishing the parameters was rated as low, medium, or high. A plan to confirm compliance is also specified with the desired parameters through either analysis, testing, comparing with similar existing designs, and inspection

TABLE 1 - FORMAL ENGINEERING REQUIREMENTS AND SPECIFICATIONS

Spec. #	Parameter Description	Requirement or Target	Tolerance	Risk	Compliance
1	Power Output	9 W - 65 W	+/- 5 W	L	A, T
2	Kinesthetic Feedback	Force	N/A	L	A, T
3	Budget	$2,500	Max	L	A
4	Reliability	N/A	N/A	M	T, S, I
5	Safety	N/A	N/A	L	I
			Risk Level: **L = Low** **M = Medium** **H = High**		**A = Analysis** **T = Testing** **S = Similarity** **I = Inspection**

This section also describes the responsibilities of the team members. The EnGen team is comprised of Evan Carr, Chris Scharff, and Andrea Govea. Evan is the team's Communications Officer, in charge of communication between the team and you. Chris is the team's Treasurer, maintaining the team's travel and materials budgets. Andrea is the team's Secretary/Recorder, maintaining all team documents in appropriate hard and electronic copies as a documentation of project progress.

Here is a timetable of project milestones that required sponsor participation:

- 12/10/2013 - Conceptual Design Review with Team EnGen
- 02/10/2014 - Critical Design Report
- 05/31/2014 - Senior Project Design Expo

Also available in Appendix F is the Gantt Chart for this project. A Gantt chart is a timetable of project requirements that is constantly updated by the team as the year progresses. It is a helpful breakdown in the amount of time each aspect of the project took, especially for tasks that rely on the completion of others and tasks that could be especially time consuming, such as acquiring materials. The chart is broken down into two sections, a textual timetable of the requirements and is a physical representation of that timetable. All past requirements have been included for completeness.

CHAPTER 2: BACKGROUND

Background research has provided many examples of human powered generators, both for general power generation needs and for educational purposes. The large numbers of these examples are in the form of stationary bike pedaling. The simplest bike generator mounts the back tire of a bike on a raised frame with the tire resting against the shaft of an electric generator. As the bike tire spins it spins the generator shaft, producing electricity. Other products available are hand crank generators and for educational purposes human hamster wheels. There are also less common products such as a see-saw generator and a small merry-go-round generator, such as those produced by Firefly Solar, Figure 1 below. Products currently available can produce from 20-40 Watts for hand cranks and up to 300 Watts with some bikes. All of these various products were studied for inspiration, looking to make a straightforward yet unique and entertaining exhibit incorporating the best aspects of current products with personal ideas.

FIGURE 1 - PEDAL-POWERED BATTERY CHARGER AVAILABLE FROM FIREFLY SOLAR

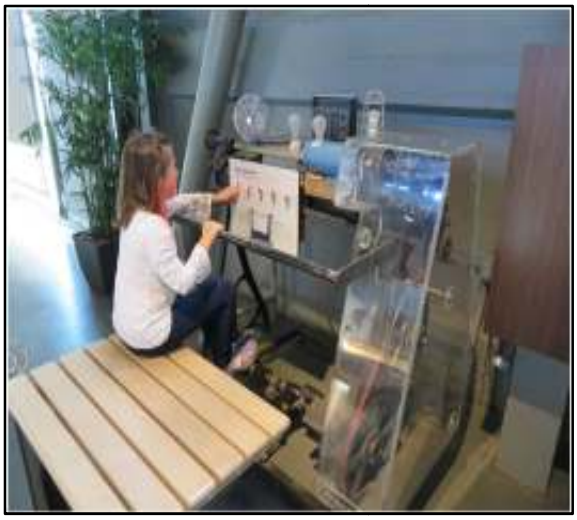

FIGURE 2 - PEDAL-POWERED ENERGY GENERATOR EXHIBIT, SF

One existing system that provided an easy comparison is a pedal-powered energy generator exhibit at the Exploratorium in San Francisco, as seen in Figure 2 above. EnGen was lucky enough that one of the sponsors and the adviser, Lee McFarland, went to the Exploratorium on separate occasions. While there they documented this exhibit with pictures, video, and feedback of its operation for the team to examine. From the pictures and feedback the pros and cons of this system were determined considered for application in the project.

It was found that, for a typical seated bicycle, children under 12 years old can put out 50 to 100Watts of power for an hour. An average adult who exercises daily can put out between 100 and 150Watts while someone who is a competitive cycler can put out up to 500Watts. This influx in power will make the design of the system more difficult. The exhibit must be accessible to both children and adults, so it must be able to withstand the output of any of these loading conditions.

As the Exploration Station is a privately owned and operated facility, the team and the ES have agreed that the design does not need to meet ADA requirements for children or adults. However, all applicable ASME and OSHA standards and practices were followed throughout the project. These standards include but are not limited to;

- Electrical Systems Design, General Requirements, General Industry (OSHA 29 CFR 1910.303)
- Wiring Design and Protection (OSHA 29 CFR 1910.304)
- Hand and Portable Powered Tools and Other Hand-Held Equipment (OSHA 29 CFR 1910.242)

CHAPTER 3: DESIGN DEVELOPMENT

CONCEPTUAL DESIGN PROCESS

The overall goal for this project was to produce an exhibit capable of converting mechanical power into electrical power. Through human mechanical input, a generator provided energy to various loading situations. It is the hope that this exhibit will allow the users to conceptualize the role that energy efficiency plays in daily life.

The Quality Function Deployment (QFD) is available in Appendix A. It compares the sponsor's project requirements with the equivalent engineering requirements developed to meet their needs. The importance of the requirements, shown on the left hand side of the QFD, was weighted in terms of necessity in the design. From correspondence, it was gathered that the most important factors of the design were safety, reliability, and kinesthetic feedback of the system. The engineering requirements, located on the top row of the QFD, are a list of measurable objectives that must be met by the final product. In the center of the QFD our engineering requirements are weighed against the list of customer requirements and ranked by how closely they relate. On the bottom of the QFD each engineering requirement is summed by taking the product of the correlation and weight of that correlation to determine the score of importance. The most important engineering requirement obtained by the QFD method was kinesthetic feedback, followed closely by overall maintenance and cost. Below the raw importance scores are a set of importance percentages normalized to the most important engineering requirement. Coincidentally, the importance value obtained for kinesthetic feedback was 100, so the normalized percentages hold same value and weight. These percentages are a breakdown of the level of importance of that engineering specification to achieve the final product. It does not mean that those percentages will be a gage of the final quality of those parameters; for example, safety will not be compromised, ranked at 74%, for the kinesthetic feedback, ranked at 100%. It is only a way to measure the importance of that requirement to the sponsor's specific needs.

The benchmarks section, shown on the very right of the QFD, is a space reserved for items and systems of the same type that could be used directly to meet your customer requirements. No benchmarks have been included due to the uniqueness of each design and a difference in overall objectives.

FINAL DESIGN SELECTION

The design process of brainstorming and idea generation led to a group of ideas for the mechanical input for the project. These ideas consisted of multiple hand crank variations and

two main foot pedal ideas. The foot pedal ideas were a race car themed exhibit and a futuristic bike theme. These designs were voted the top concepts for their storytelling ability as a children's exhibit. Figure 3 below shows selections of the top concepts, though detailed descriptions of the ideas considered can be seen in Appendix A. All of the concepts developed met the kinesthetic feedback, safety, and reliability design factors so a Pugh Matrix, which can also be found in Appendix A, was used to narrow down the final design.

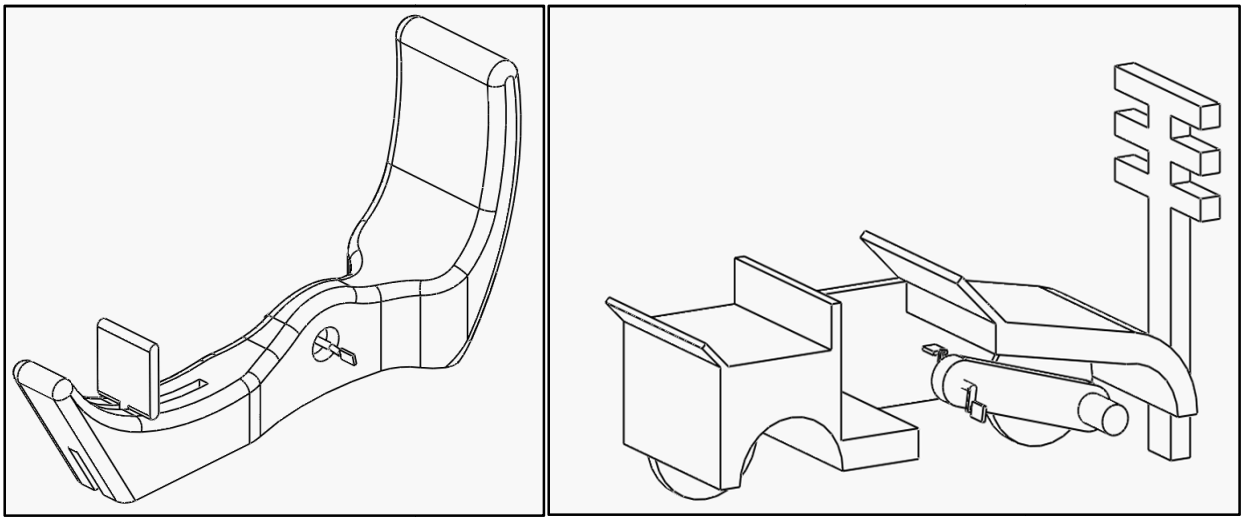

FIGURE 3 - TOP IDEAS FOR PEDAL GENERATION DESIGNS

Using Pugh Matrix analysis and discussion with the sponsors, the general shape of the exhibit was determined. The matrix compared several exhibit "shapes" (wall mounted/stand alone, foot powered/hand powered, etc) to a datum that exists as an exhibit already. Using the Pugh Matrix allowed the team to narrow down the list of exhibit ideas without having to distinguish between types of hand cranks or types of foot pedals. The concept described in the matrix that had the most benefits and least negatives when compared to the datum was the car shaped pedal exhibit.

Through further communication with the ES the car-shape idea was synthesized into the final idea of an energy generator truck which would be used to power a model neighborhood of opposing efficient and inefficient sides of the street. Further brainstorming and designing of the shape, size, and construction of the energy generator truck persisted. After considering welded steel tubing, bolted perforated steel tubing, and aluminum T-slot extrusion for the frame, the aluminum extrusion was chosen based on its ease of assembly and high freedom in adjustability of the design. In addition, the aluminum extrusion naturally allows for modularity in the frame, a feature requested by the sponsors in the various discussions. Figure 4 below shows the completed conceptual model for the energy truck design.

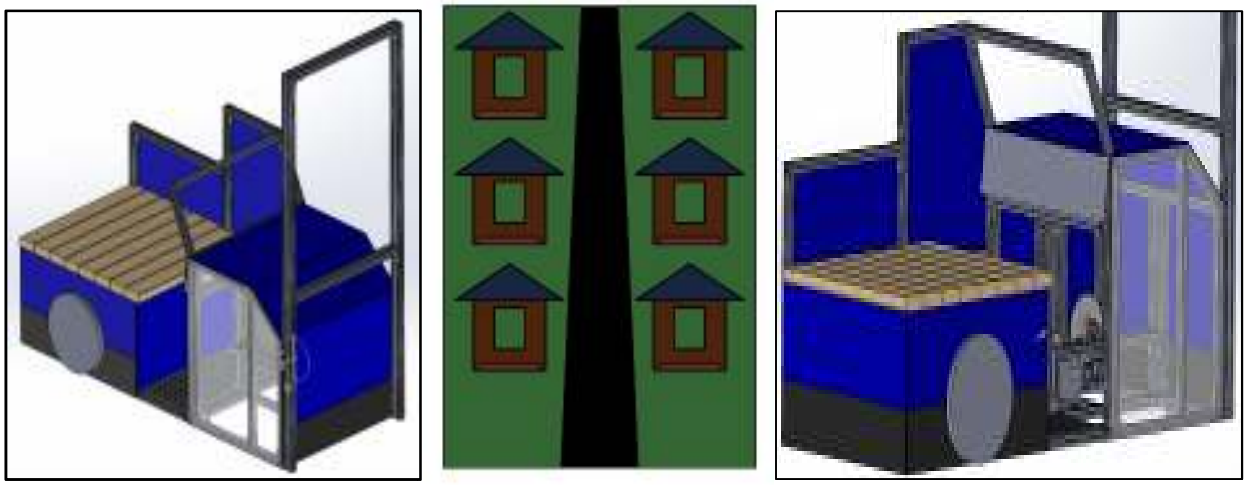

FIGURE 4 - PRELIMINARY DESIGN FOR ENERGY TRUCK EXHIBIT

To begin testing on the final design for the energy generator, the project was identified into three points of failure; the frame, the pedal assembly, and the electric circuit path. Each point required a separate set of tests and analysis specific to where the most likely point of failure. For the frame, it would be in the high load bearing section where people will sit. A varying amount of load will be applied to the section of up to, and possibly exceeding, 300lbs. This load range should be sufficient enough to encompass the wide variety of users that will be seen by the exhibit. In the pedal assembly, a common issue that arises on bikes and similar exhibits is a disconnection that can happen between the chain and sprocket. This can be monitored through testing between varying pedal speeds and abrupt shifts in direction or common abuse. Lastly, the circuit will have to be tested extensively with the chosen generator to verify a maintained power production. A varying amount of loads and speeds could be used to test the circuit under normal operation. A summary of the testing results and conclusions can be found in Chapter 6.

CHAPTER 4: FINAL DESIGN

The final design of the exhibit is made up of four main parts: the frame, the pedal-generator assembly, the display board, and the electronics. The pedal-generator assembly is mounted inside the frame and the display board is mounted to the front of the frame. The electronics tie the generator to the display board, with user controls mounted on the dashboard of the vehicle.

FIGURE 5 - FINAL EXHIBIT

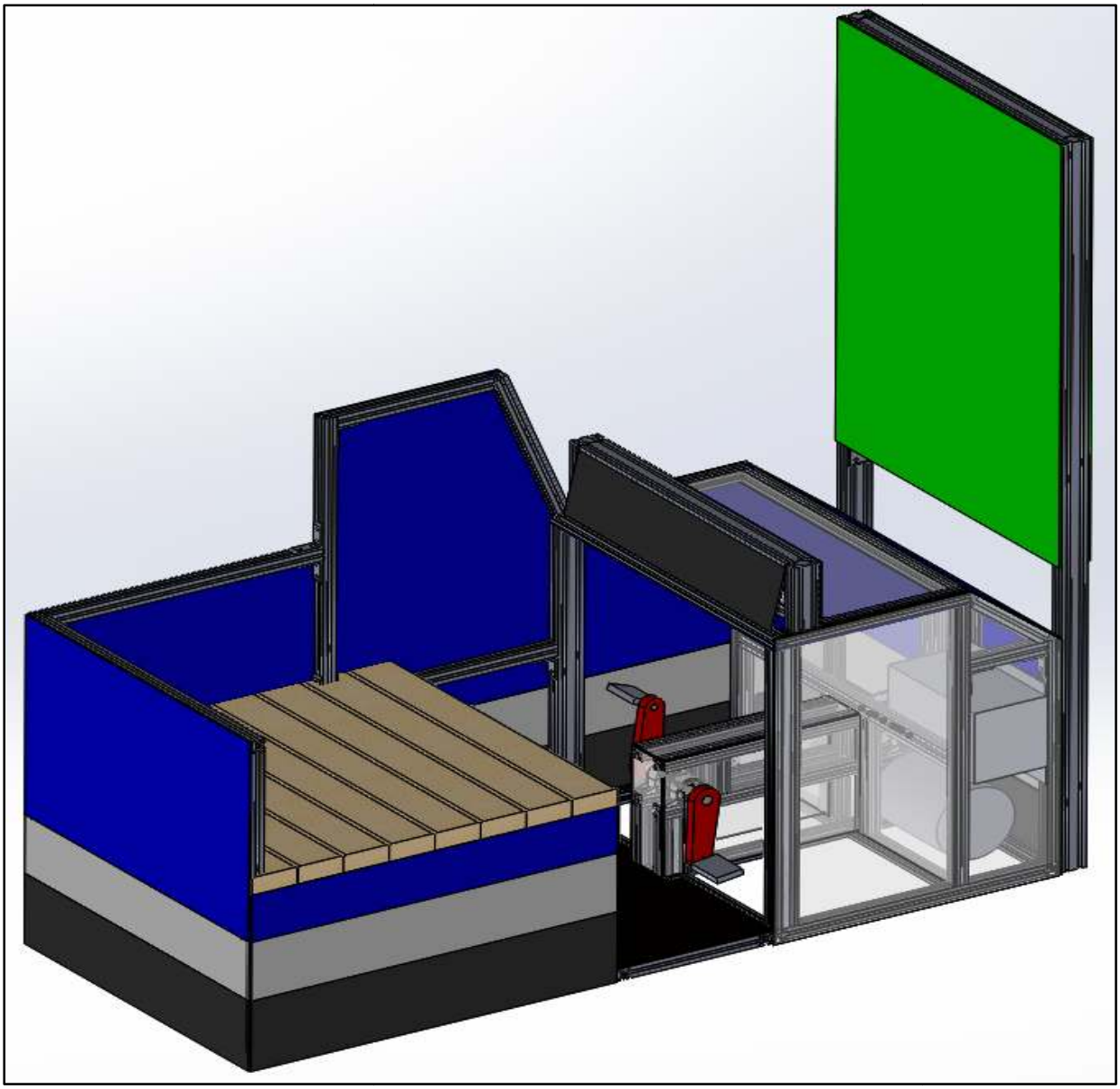

FIGURE 6 – FINAL MODEL OF EXHIBIT DESIGN

THE FRAME

The frame is made out of t-slotted aluminum extrusions, of 1”x1” and 1”x2” rectangular cross-section. As stated previously, aluminum extrusion was chosen for the frame because it is easy to assemble and allows for freedom in tweaking the design. Extrusion also allowed for the frame to separate into modular sections for transport with relative ease. Other considered materials for the frame included welded steel tubing and bolted perforated steel tubing (i.e., a stop sign pole). Perforated steel tubing was more expensive than the aluminum extrusion, and did not have good aesthetics compared to the clean connecting of aluminum extrusion. Welded

steel tubing would be less costly than extrusion, however the lack of welding experience of the team and welding's unforgiving nature with design tweaking led us to steer away from it. Figure 7 below shows a model of the aluminum frame complete with connections.

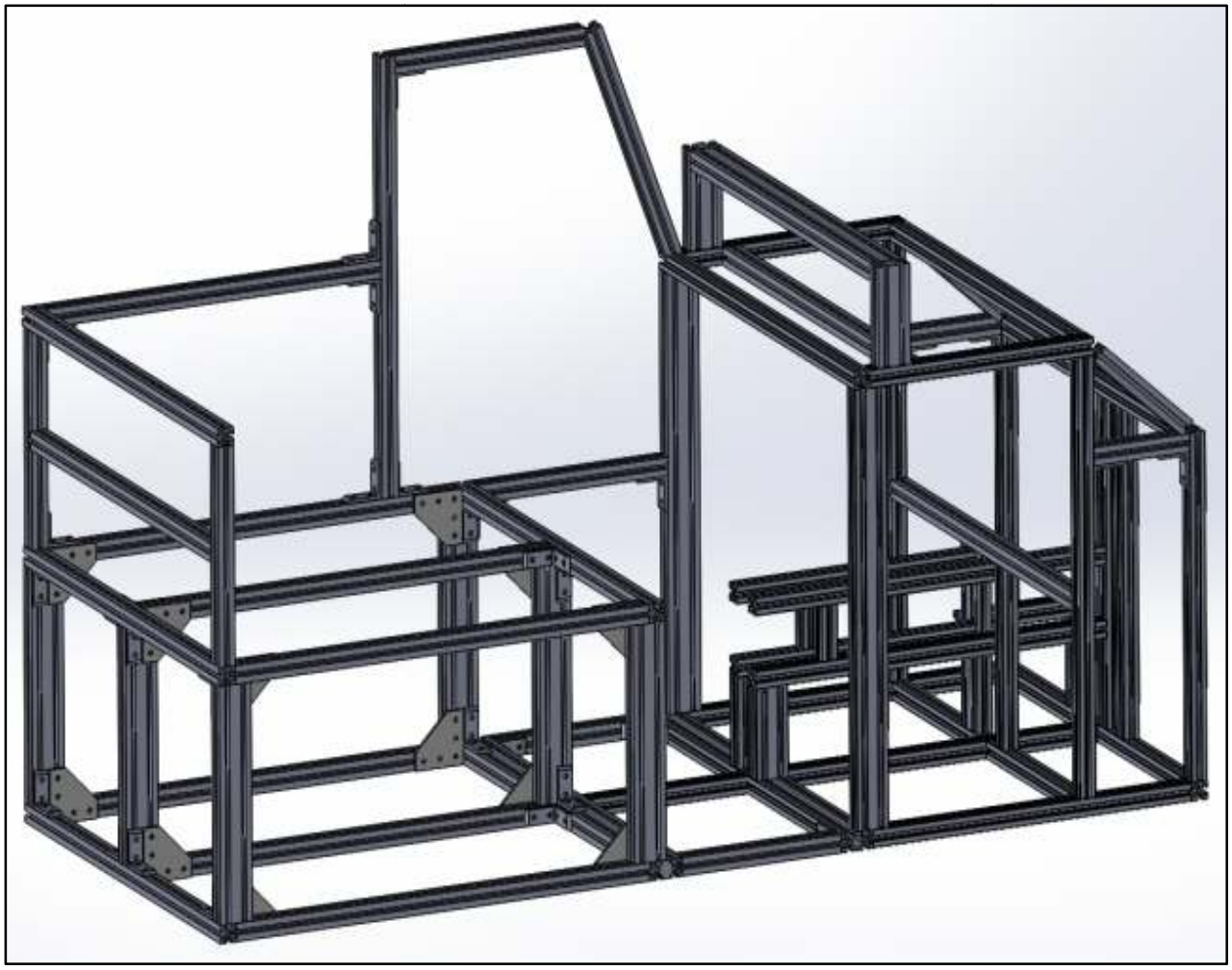

FIGURE 7 – FINAL MODEL OF EXHIBIT FRAME WITHOUT DISPLAY

The frame is in the shape of a utility pickup truck, which is separated into front and back sections. The front section, Figure 8 below, includes the hood of the truck back to the windshield and contains the pedal-generator assembly as well as user controls, system electronics, and wiring. The back section, Figure 9, is considered the bed of the truck and part of the cab; this section acts as a bench seat for users of any size. The bench is made out of an array of pine 2x4's coated in three layers of poly urethane.

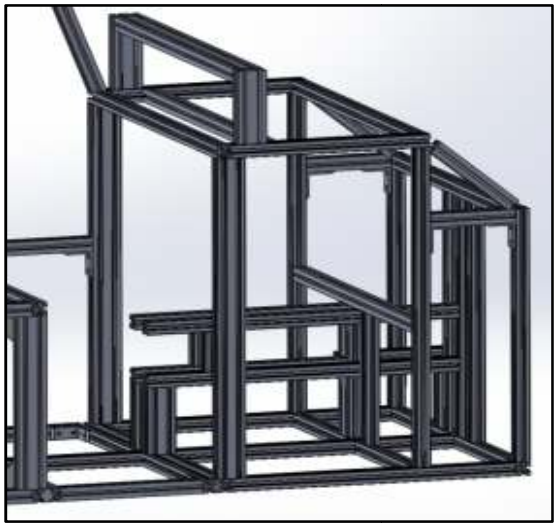

FIGURE 8 – FRONT SECTION OF TRUCK FRAME

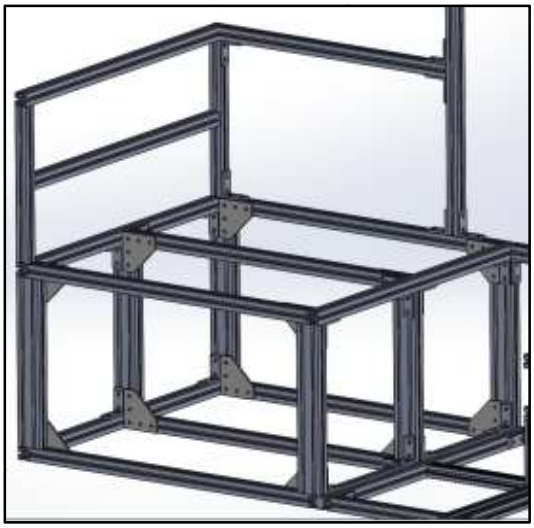

FIGURE 9 – BACK SECTION OF TRUCK FRAME

Connecting the front and back sections is an aluminum extrusion floor frame topped with a sheet of black textured acrylic, which is seen in Figure 6. Disconnecting this floor allows the front and back to be moved as separate modules. Mounted on the left side of the sections, from along the back section to connect to the front, is an extended frame to help form the truck model by shaping the cab and utility bed as seen in Figure 10 below. The entire aluminum extrusion frame has acrylic panels on all sides. On the side with the extended frame, a large silhouette panel adds to reinforce the utility truck shape and look, Figure 10.

FIGURE 10 – SIDE VIEW OF EXHIBIT WITHOUT DISPLAY

The back frame section, Figure 8, is a simple rectangular box of dimensions 27”L x 26”W x 15”H, with additional center supports lengthwise and vertical. The front frame section, Figure 7, is a slightly more complex box, of approximate dimensions 22”L x 26”W x 26”H with a 45 degree angled cut, 6”L x 26”W x 6”H, of the “hood” front corner. The windshield extends at a 60 degree angle up a height of 10 inches above the top of the “hood”. The connecting floor between sections is 12”L x 26”W x 1”H.

For connecting aluminum extrusion together, there are multiple methods available. However, the use of L-brackets and plates with t-slot nuts and bolts was the method chosen for this project. The t-nuts are placed into the grooves of the t-slot extrusion, Figure 11, and then can connect similarly to any other pieces of extrusion at right angles with the pieces selected, Figure 12. Although L-brackets and plates are more expensive, this was chosen over other methods which require tapping of extrusion ends or machining of holes for embedded bolts as these latter methods reduce the adjustability of the frame during the design and assembly processes.

FIGURE 11 – T-SLOT ALUMINUM EXTRUSION

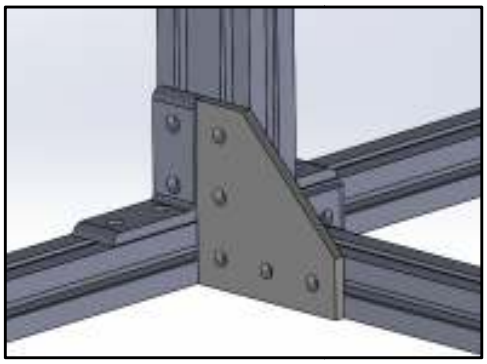

FIGURE 12 – MODEL OF FRAME JOINT

A major concern with choosing 1 inch square extrusion was its strength and stiffness. In Appendix E analysis of the aluminum extrusion is performed with simple maximum deflection calculation for a “worst case scenario” in which a 30 inch length of extrusion is simply supported and a 300 lb load is applied at the center. This length was chosen as it was the longest continuous supported length in our frame. Using data from 80/20 Inc. 2012 Product catalog Fractional Section, as found in Appendix D, 1010 series extrusion had a maximum deflection of 0.374 inches was found. Later in the construction of the frame, extra vertical supports of extrusion were placed in the back section to halve the longest continuous supported length to 15 inches. Deflection of a simply supported beam is a function of beam length cubed, so by reducing the length by ½ the deflection was reduced by ⅛, to about

0.04675 inches. This deflection is less than 3/64 of an inch and is small enough for our purposes to be acceptable, especially for a worst case scenario.

PEDAL ASSEMBLY

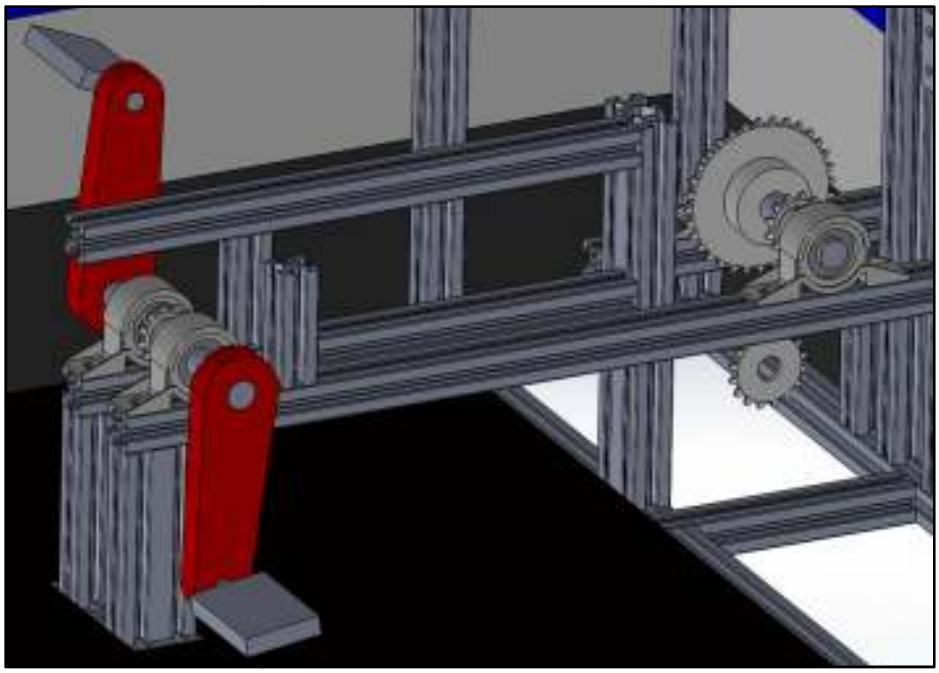

FIGURE 13 – ISOLATED DISPLAY OF PEDAL ASSEMBLY WITHOUT ROLLER CHAIN

Mounted inside the front section is the pedal-generator assembly, as seen in Figure 13. The pedals are mounted directly under the dashboard on a rectangular extrusion support system. On the pedal shaft is a 12-tooth sprocket, with ⅜ inch pitch and attached to the fully-keyed shaft using a key and set screws. An ANSI #35 roller chain from this sprocket connects to one of equal size on an intermediate shaft, which has a 32-tooth sprocket mounted adjacent. The large sprocket on the intermediate shaft in turn connects to a 16-tooth sprocket mounted on the generator to provide a gearing up of rpm from the pedals to the generator shaft at a ratio of 2:1. To support the pedal and intermediate shafts, mounted ball bearing were used. The mountings for the bearings were made from stamped steel and the bearings are rated for over 950 lbs of dynamic loading at a maximum speed of 5800 rpm. The speeds experienced from the exhibit are at most around 100 rpm and with loading of less than half the bearings' rating.

The crank arms for the pedals were custom made from 6061 aluminum bars. They were originally attached to the shaft with two #10-32 button-head socket cap screws. The screws went through clearance holes on the crank into a transverse threaded through hole in the shaft from both sides. Manufacturing drawings for the crank arms and pedal shaft can be found in

Appendix B. When the pedals were put to full use under a maximum light bulb load of 80 Watts the screws securing the cranks to the shaft eventually sheared.

Analysis was done on the loading of the screws based on a fixed shaft and the crank arm vertical, with a pedal force applied perpendicular to the crank. The shearing stress was calculated and compared to the approximate shearing strength of the screws. Based on the approximation described in the Industrial Fasteners Institute's *Inch Fasteners Standards*, 7th ed., a steel fastener's shearing strength can be assumed to be 60% of its minimum tensile strength. For the #10 screws, a designated minimum tensile strength of 120,000 psi means a shear strength of about 72,000 psi. With this shear strength, it was found that the screws would fail at just 115lbs applied at the pedal. This calculation can be found in Appendix E along with a Free Body Diagram of the crank arm to determine the forces acting on the pin. A pin replacement was then added to the exhibit for prolonged use. Further analysis of the pin replacement can be seen in Chapter 5: Project Realization.

DISPLAY BOARD

FIGURE 14 - TWO VIEWS OF THE DISPLAY WHEN ATTACHED TO THE EXHIBIT

The display portion of the exhibit, pictured in Figure 14 above, consists of a 'neighborhood' of houses being lit directly by pedaling the energy truck. Each house is three-dimensional and made from translucent blue and red acrylic pieces to form a box. The houses are set forward from the backdrop and a light bulb is mounted in a socket inside each house to represent the power being delivered. The background of the display to which the houses are mounted

consists of a printed out street scene sandwiched between a thin clear acrylic panel on the outside and a thick translucent blue acrylic panel on the inside. On the dashboard of the vehicle, the user can select which side of the 'street' they wish to supply power. The right side is lit by inefficient incandescent bulbs and the left side is lit by efficient LEDs. The user will also be able to choose how many of the three houses on a side are lit, in no particular order. Toggle switches are used to change sides of the 'street' and number of houses. As the number of houses that are lit increases, the load felt by the user is also increased. The LEDs used are about 5W each, and equivalent in brightness to a 50W incandescent. The incandescent bulbs used are 25W each, which in addition to a 5W LED base load brings the maximum load to 80W. The LED side maxes out at 20W. Switching between the left and right sides of the street gives obvious feedback on how the efficiency changes the load for the same number of bulbs.

ELECTRONICS

FIGURE 15 - FRONT AND SIDE VIEW OF PART OF THE ELECTRICAL SYSTEM INCLUDING BASE LOAD LED, CUSTOM REGULATOR, GENERATOR, AND TERMINAL BLOCK

The electronic system of the exhibit starts consists of the generator, custom regulator, wiring, switches, and light bulbs. Figure 15 above shows the major part of the electrical system. The generator used was the WindTura 750, 3-phase AC permanent magnet alternator (PMA), by Windy Nation. This PMA, as seen in Figure 16, was designed for personal purpose wind turbines, making it very efficient and able to generate ample power at relatively low speed. The specifications of the generator can be found in Appendix D. In order to rectify the AC output to DC and to regulate the input to the system at 12V, a custom regulator shown in Figure 17 was made for the team by Charlie Shaw of C.W. Shaw Inc. Charlie has made regulators like this for similar exhibits, some using the same or similar generator as above. The nature of the custom

regulator doesn't require a minimum input voltage, as commercial regulators do, because the custom regulator must be plugged into a wall outlet. However, this allows the system to start from zero volts and increase to, and stay at, 12 volts without adding significant additional load to the system. The end result is a more realistic loading than typically possible with commercial regulators, which was one of the main requirements of the exhibit. The regulator came with 30 Amp fuses at the input and output junctions to protect the system. To match this level of protection, 10 gauge stranded wire was used throughout the system. In addition, a base load in the form of an LED light bulb was permanently wired in to the system to prevent voltage spikes during the momentary open circuit that occurs during switching.

FIGURE 16 - WINDTURA 750, 3-PHASE AC PERMANENT MAGNET ALTERNATOR

FIGURE 17 - CUSTOM REGULATOR, WITH 3-PHASE AC INPUT AT BOTTOM FUSES, DC OUTPUT AT TOP FUSE, AND AC-TO-DC RECTIFIER AT FAR LEFT

From the base load, power is sent to the dashboard and connected to the toggle switch which controls the side of the display being lit. Power is next jumped to the three toggle switches controlling which row of light bulbs is being lit. The toggle switches wiring can be seen in Figure 18 below. All toggle switches are heavy duty rated for 30A at 30VDC. From the three switches, wires connect to a terminal block shown in Figure 19, with the matching terminals leading to the display board. This allows for the display board to be easily disconnected and removed from the rest of the frame if needed. A simple wiring diagram for the system can be found in Appendix B.

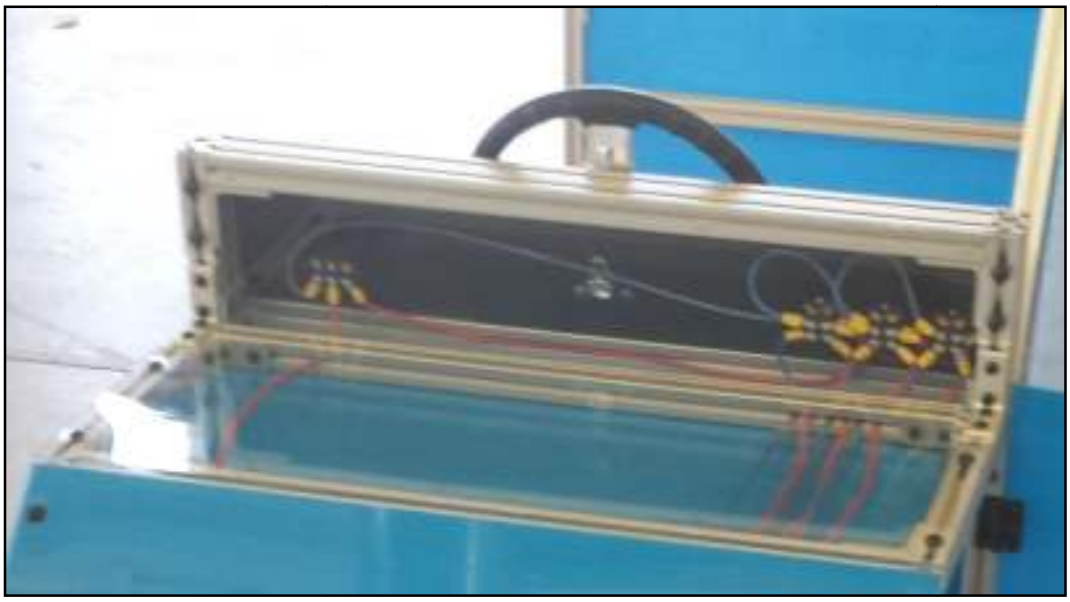

FIGURE 18 - WIRING TO TOGGLE SWITCHES ON DASHBOARD

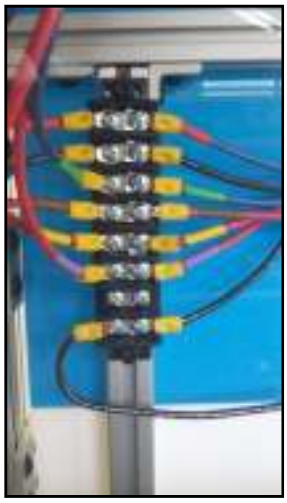

FIGURE 19 - CLOSE UP VIEW OF TERMINAL BLOCK, WITH THE LEFT SIDE GOING TO THE SWITCHES ON THE DASHBOARD AND THE RIGHT SIDE GOING TO THE DISPLAY

SAFETY

To prevent users of the exhibit from being able to touch or interact with any moving mechanical components or potential electrical hazards, critical areas were isolated the with the use of acrylic panels. The generator and the voltage regulator were sequestered into the very front of the exhibit frame. This allowed the use of a single piece of clear acrylic to separate the feet area from the critical area, shown in Figure 20. To prevent any user interaction with the pedal shaft sprocket and primary roller chain, a box was fashioned out of clear acrylic and mounted to the extending extrusion supports for the pedal bearings, Figure 20.

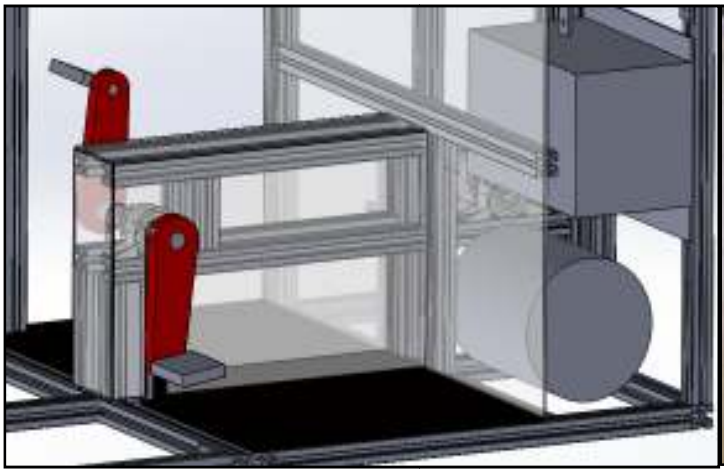

FIGURE 20 – CLOSE UP OF BOX AND SEPARATING ACRYLIC PANEL

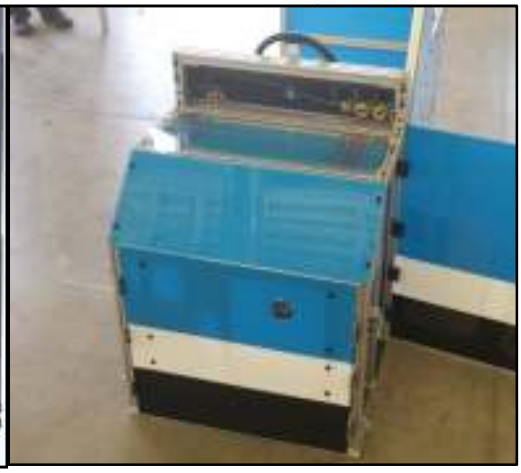

FIGURE 21 – EXHIBIT WITH HINGED PANELS UNLOCKED AND OPEN

We chose clear acrylic for both of these areas so the users can see the mechanical and electrical insides of the exhibit. Both sides of the exhibit front have hinged panels for better access to the interior of the exhibit, Figure 21. These doors can be either locked with small padlocks or bolted shut. For the wiring protection, all wires are either behind the separation panel or sandwiched in between acrylic layers where users cannot access them.

COST ANALYSIS

Being that this project is not a prototype but rather an exhibit designed for museum use upon completion, the cost of the exhibit does not take into account stages such as prototyping and mass manufacturing. The budget for this exhibit was $2500 and this money was provided to the Exploration Station through a grant from the Pacific Gas and Electric Company. In total, we spent our entire budget on purchasing the materials, tools, and accessories required to design and build this exhibit. However, due to a generous donation from TSLOTS by Futura Industries, we were able to get $1700 worth of aluminum t-slotted extrusion framing material and

hardware for free. This value, combined with the budget, brings the total worth of the project to $4200, at a cost of only $2500. Included in Appendix B is a complete Bill of Materials for the exhibit itself which excludes materials purchased but not used in the final exhibit and comes out to about $1500 plus the $1700 of donations from TSLOTS for a total of $3200. Vendor information used for the materials is included in Appendix C.

MAINTENANCE

In order to conduct rare, but potential, maintenance on the electronics and pedal-generator assembly, or to transport the exhibit, parts of the frame will need to be separated. For major maintenance, the truck front top is relatively easily removed for better access. For long distance transportation, the truck front can be separated from the truck back and display. Steps are outlined with pictures as reference in order to separate the truck frame at two main locations in Appendix G. For minor maintenance, such as chain lubrication, the box encasing the sprockets and chain can be detached at any time by completely removing the four screws holding it to the frame, Figure 22, and lifting up. To replace, the t-nuts must be slid into the extrusion before the box is lowered and tightened securely.

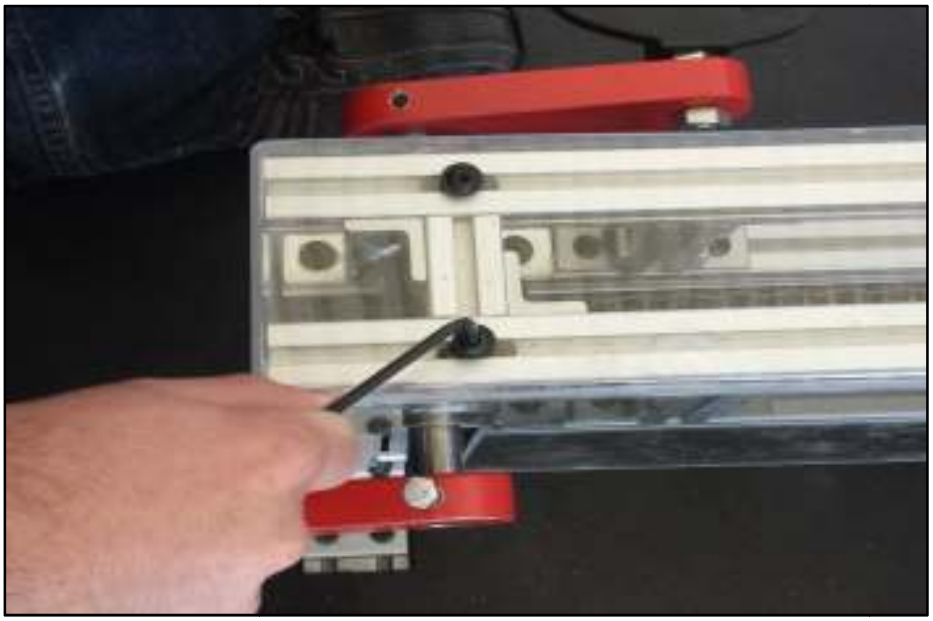

FIGURE 22 - DETAILED IMAGE OF ACRYLIC BOX REMOVAL

CHAPTER 5: PRODUCT REALIZATION

To build the exhibit, there were several methods of manufacturing that were employed. As most of the extrusion was purchased "cut-to-length," a majority of the frame was able to be assembled without any required machining. If a piece of extrusion needed to be cut shorter, either a vertical band-saw or a metal chop-saw was used. All of the connection hardware was externally applied to the extrusion pieces. This required the pieces to be fit together in a specific order so that all the hardware would not interfere with each other during assembly. The bolts used for the extrusion are ½" long, ¼-20 bolts with specialty t-nuts used specifically for t-slotted extrusion. The bolts were tightened with a 5/32" hex-head driver.

The acrylic panels that shroud the frame were also ordered to be cut to the sizes required. The only machining they required was drilling the holes for the extrusion mounting bolts in the correct places. Some of the interior acrylic panels, such as the ones that separate the foot area from the mechanical and electrical components, needed to be cut with the band-saw. The acrylic was mounted to the extrusion frame with ⅜" long ¼-20 bolts and t-nuts.

The pedal cranks required the most machining out of any part in the design. Stock aluminum 6061 bars were purchased with dimensions of 6"L x 2"W x 0.75"Thick. The milling machine was used to drill the through holes for both the drive shaft and the pedal bolts, as well as the transverse hole for the securing bolts for the drive shaft. The pedal bolt holes were drilled and tapped to fit ½-20 bolts. To get the desired tapered shape and rounded ends, rough cuts were made on the vertical band-saw. Then the aluminum grinding wheel was used to smooth out the edges and attain the desired finish and shape. The pedals were then spray-painted red, to match with the existing color scheme of the children's museum and to protect the raw aluminum.

To secure the pedal cranks to the drive shaft, 0.159 inch holes were drilled into each end of the shaft with a milling machine and the holes were tapped and threaded to fit #10-32 screws. When it was discovered that the original bolts were too small for the loads at the drive shaft, the tapped holes in the drive shaft were replaced with ¼" through holes.

Without the time and resources to redesign the crank-shaft connection, a quick fix was required. It was decided to drill out the transverse shaft hole to match the ¼ inch crank arm holes and to secure the cranks to the shaft with some sort of pin. Spring pins, clevis pins, and regular bolts were considered. Appendix E shows an Excel spreadsheet analyzing various pin types based on their determined shear strength, the same calculations performed previously on the #10 screws. Although the exhibit is intended for children, it is also designed to allow most adults to use it, which is where the large forces that must be considered come from. A max load

of 300 lbs at the pedals is assumed to be produced by an adult at full load switch-over to incandescent bulbs. It is at this switch from three LEDs to three incandescent bulbs which results in a sudden jump in load to cause the pedals to almost jerk to a stop. If more time were available, further analysis of this dynamic loading would be examined. From the Excel analysis it was determined the most promising pin type was a slotted spring pin, which could handle over 500 lbs applied at the pedal.

The major concern with the pin replacement design is the strength of the ¾ inch shaft with a ¼ inch transverse hole in it. Calculations were performed based on equations for a radial pin in a shaft-hub connection as pictured in Figure 23 below. These equations came from MITCalc (Mechanical, Industrial, and Technical Calculations), an Excel-based design calculator that contains many different design scenarios, such as the pin connection in Figure 23, which can be analyzed quickly and easily with geometry, material, and load inputs. Hand calculations using these equations as well as the calculator program can be found in Appendix E.

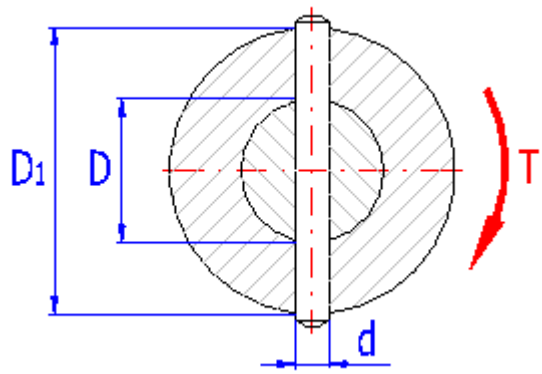

FIGURE 23 - RADIAL PIN FOR SHAFT-HUB CONNECTION

The results of these calculations show the shaft only has a safety factor of 1.60 with a 100 lbs load at the pedal, which is considered the max child loading. This is far below the target max loading of 300 lbs and is the most likely part to break. To help reduce the chance of failure, it will be recommended that the exhibit receives limited adult use and that adults who do use it turn all light bulbs off and stop pedaling before switching from LEDs to incandescent bulbs. In addition, the 25W incandescent bulbs will be replaced with 15W incandescent bulbs to reduce the maximum load. These adjustments will help maintain the exhibits usability until a new shaft-crank design can be implemented to withstand extensive adult use.

CHAPTER 6: DESIGN VERIFICATION & TESTING

When it was found that the t-slotted aluminum easily held the weight of 300lbs design weight, testing was focused primarily on the electrical side of the exhibit. Specifically, it was required to determine what voltages could be produce out of the generator and if the values were in the range of acceptable use for the 12 VDC regulator. The Cal Poly Daycare Center was nice enough to bring children for testing. The gear ratio used for the test was 6.25:1. The children sat at the pedals, as they would when the exhibit is complete, and the max VAC across two of the leads from the 3-phase alternator was measured as they pedaled. The results from this test can be seen in Table 2 below.

TABLE 2 - RESULTS OF CHILD PEDALING TEST

Voltage (V)								
Age (yr)	Sex	Run 1	Run 2	Run 3	Run 4	Run 5	Max	Average
5	F	76.2	89.1	93	91.9	92.2	93	88.5
5	M	89.4	94.7	96.7	98.1	98.9	98.9	95.6
4	F	69.4	79.8	80.9	74.2	76.7	80.9	76.2
3	M	41.3	41.3	49.5	N/A	N/A	49.5	44.0
4	M	43.3	56.5	60.4	56.5	61.3	61.3	55.6
4	F	57.6	71.1	76.4	80.9	N/A	80.9	71.5
9	M	96.1	102	106.2	N/A	N/A	106.2	101.4
23	M	129.8	N/A	N/A	N/A	N/A	129.8	129.8

It was determined from this test was that at the gear ratio of 6.25:1 too high of voltages were being produced from the generator for the regulator to handle. The solution to this problem was simple. The gear ratio needed to be lowered to reduce the RPM at the generator. The gear ratio was changed to 2:1 and the VAC was lowered to a range that the regulator could work with, a max input of approximately 115VAC.

Available in Appendix E is a Design Verification Plan and Report (DVPR). This is a layout of testing the various points of failure and documenting the results after testing has been completed.

CHAPTER 7: CONCLUSIONS AND RECOMMENDATIONS

The goal for this project was to create a fun and exciting energy generation and efficiency exhibit for the Exploration Station (ES). The design decided upon by the team and the ES consists of the energy truck and neighborhood display, connected via a pedal generation system. This exhibit has been designed for both child and adult use, with emphasis on the safety and reliability of the end product as per the requirements of the ES. The design will be verified extensively through testing during and after the manufacture process. The final product will be made available for public user following participation in the Cal Poly Mechanical Engineering Senior Showcase.

The prototype is very similar to the planned design because the project was to design an exhibit that is ready to use upon completion and has no plans for mass production. If tasked with building another exhibit like this, there would be definite areas which could be improved upon for manufacturability. The arrangement of the extrusion frame pieces could be changed so the exhibit is easier to disassemble and maintain. It is also recommended that consideration for the wiring of the electrical components be taken into account earlier in the design process, as this would decrease the difficulty of choosing the best way to arrange the wires with relation to the mechanical components as well as incorporate an ease of accessibility not realized previously. In general, a more planned out design performed earlier in the design process would result in a cleaner, more maintainable exhibit.

REFERENCES

Exploration Station. N.p., n.d. Web. <http://explorationstation.org/>.

"Kinectrics Human Power Generators." *Products and Accessories*. Firefly Solar, n.d. Web. 10 June 2014. <http://www.fireflysolar.net/products/kinectrics>

"Power vs Torque." *Cycling Tips*. N.p., 4 June 2009. Web. 12 Feb. 2014. <http://cyclingtips.com.au/2009/06/power-vs-torque/>

80/20 Inc. 2012 Product Catalog, Fractional Section <http://download.8020.net/2012_Product_Catalog/Fractional_Section_1_8020_Catalog_18.pdf >

"TENSILE STRENGTH TO HARDNESS CONVERSION CHART."*TENSILE STRENGTH TO HARDNESS CONVERSION CHART*. Mississippi Welders Supply Co., n.d. Web. 10 June 2014. <http://www.mwsco.com/kb/articles/19990630e.htm>

Lindsay, Greg. "Bolt Shear Strength Considerations - Ask the Expert." *Ask the Expert RSS*. Portland Bolt, 7 Aug. 2007. Web. 10 June 2014. <http://www.portlandbolt.com/faqs/bolt-shear-strength-considerations/>

"Pinned Couplings." *Pinned Couplings*. MITCalc, n.d. Web. 10 June 2014. <http://www.mitcalc.com/doc/pins/help/en/pinstxt.htm>

APPENDICES

APPENDIX A: QFD, ENGINEERING REQUIREMENTS, CONCEPTUAL DESIGNS, DECISION MATRIX

APPENDIX B: DRAWING PACKET

APPENDIX C: LIST OF VENDORS AND CONTACT INFORMATION

APPENDIX D: VENDOR SUPPLIED COMPONENT SPECIFICATIONS AND DATA SHEETS

APPENDIX E: DETAILED SUPPORTING ANALYSIS, DVPR

APPENDIX F: GANTT CHART

APPENDIX G: MAINTENANCE

Appendix A - QFD

Customer Requirements	Weighting (1 to 5 ;5=highest)	Measurable difference in cranking to different inputs	Minimal annual maintenance	Costs ≤ $2500	No pinch points, electrical exposure (shock potential), sharp corners	Has wheels	Keep noise under 65 Db	Completely self-powered	Benchmarks
	Engineering Requirements								
Kinesthetic feedback	5	9	1						
Reliable	5	3	9	3	1			3	
$2500 Budget	4	1	9	9	3	1	1	3	
Safe	5		1	3	9	1	1		
Aesthetics to fit in with other exhibits	3			3					
Meet PG&E Grant requirements	4	9							
Semi-portable	2			1	1	9		3	
Reward for “conserving energy”	2								
Not too loud	2			1	3		9		
Does not require external power	4			1	1			9	
Importance Scoring		100	91	83	74	27	27	69	
Importance Rating (%)		100	91	83	74	27	27	69	

9 Strong Correlation

3 Medium Correlation

1 Small Correlation

Blank No Correlation

Appendix A – Idea Generation

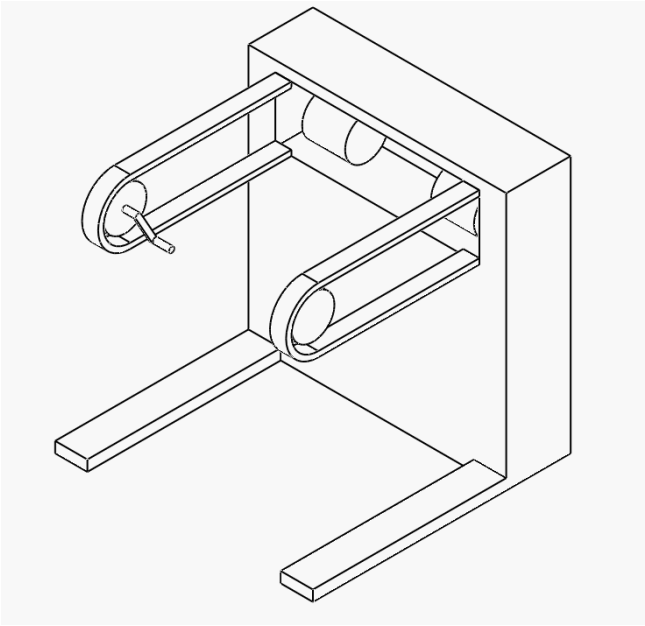

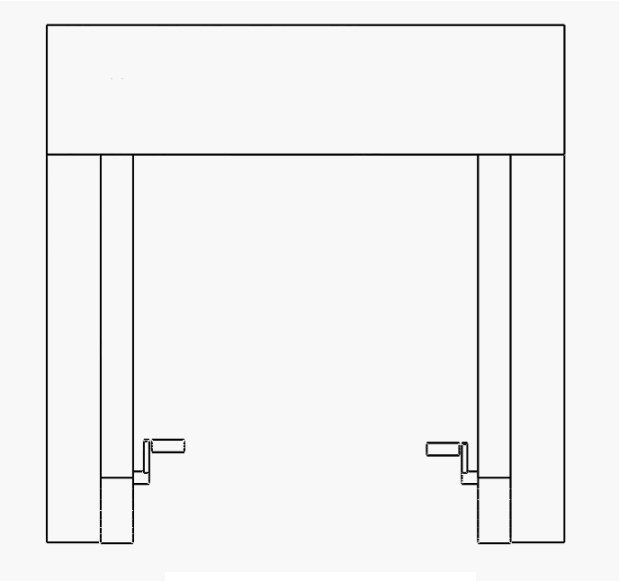

Top View

Double hand crank

- Seated or standing position
- Instant feedback w/ two cranks running separately
- Or, 2 people
- Kids and adults

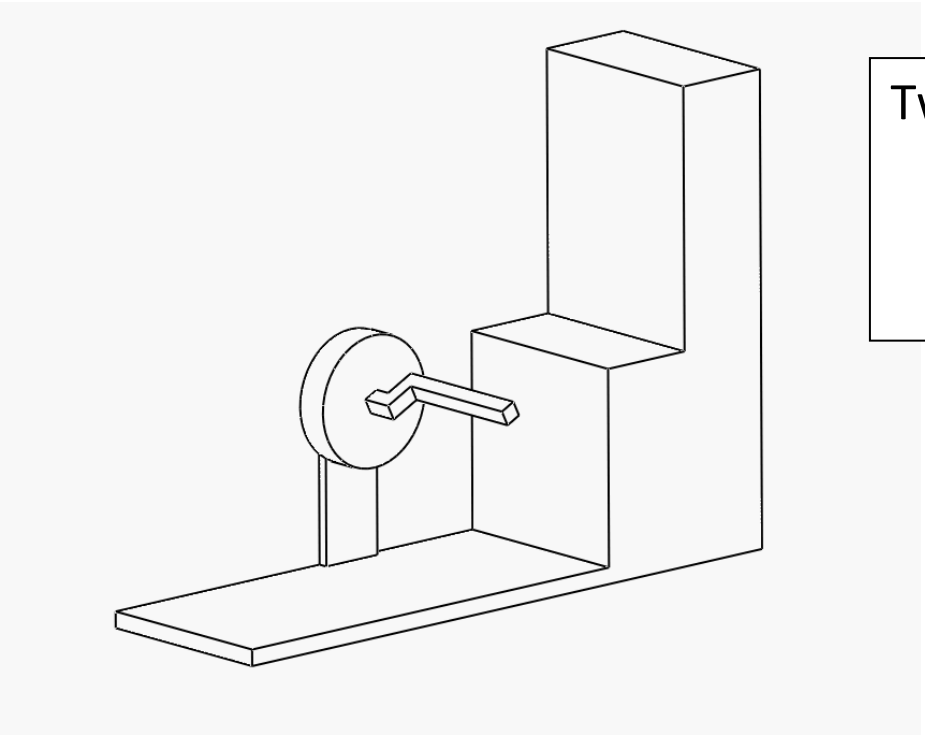

Two-handed crank

- Seated or standing position
- One-way entry/exit
- Kids and adults

‘Safety’ crank

- Seated or standing position
- No collisions
- Kids and adults

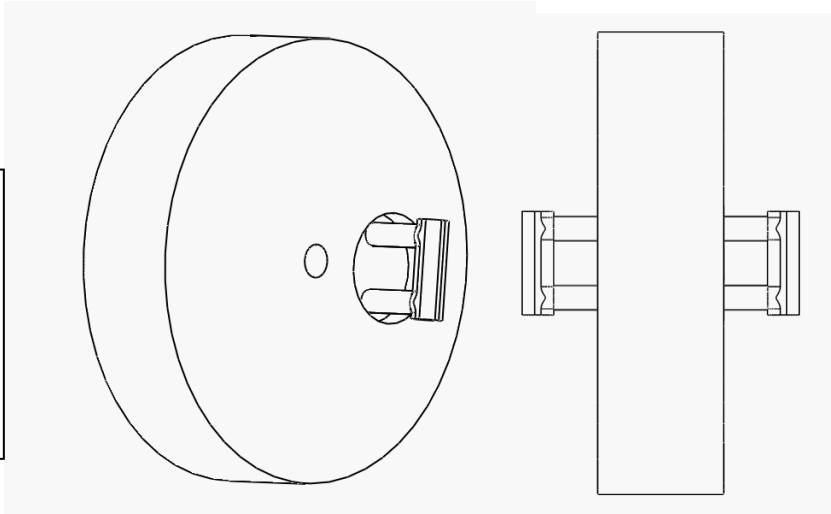

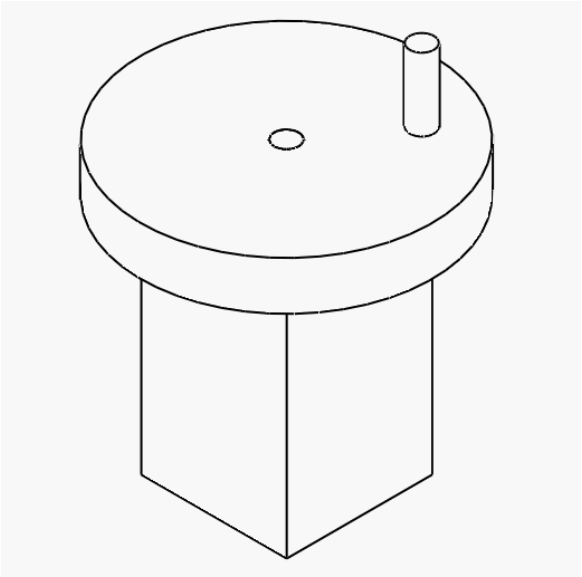

‘Turntable’ crank

- Seated or standing position
- No collisions
- Kids and adults

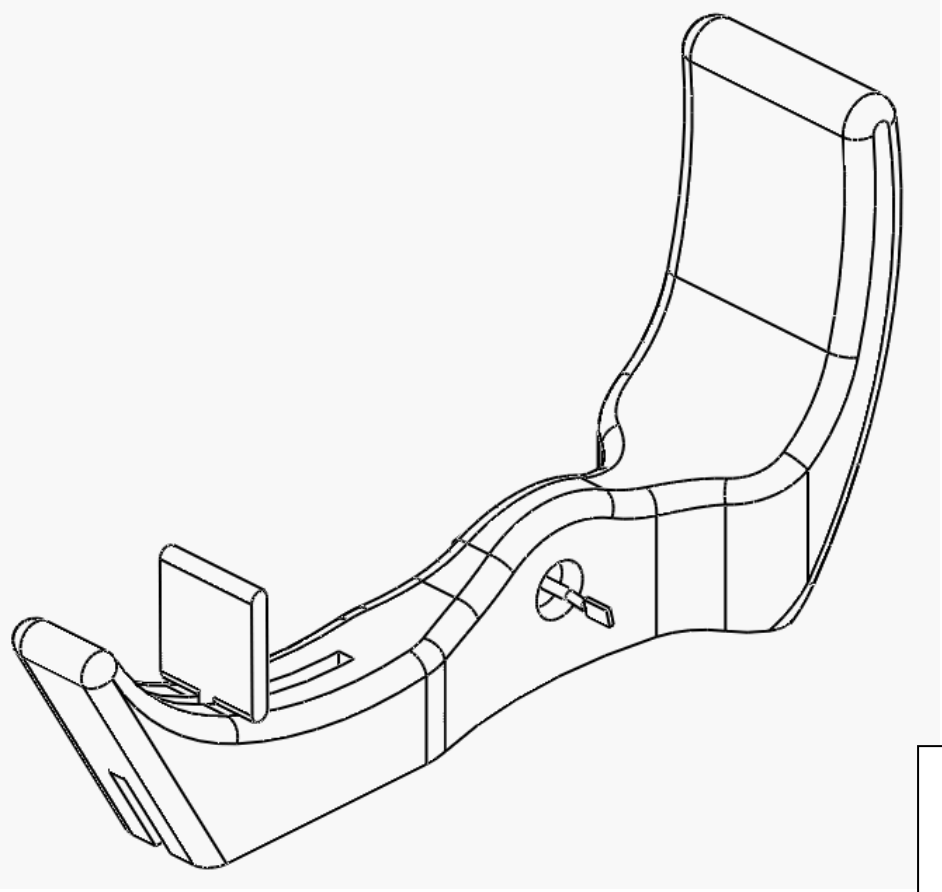

Future Bike

- Adjustable seat for all sizes
- Cooler than a regular bike generator
- "The Future is Brighter with LEDs!"
- Kids and adults

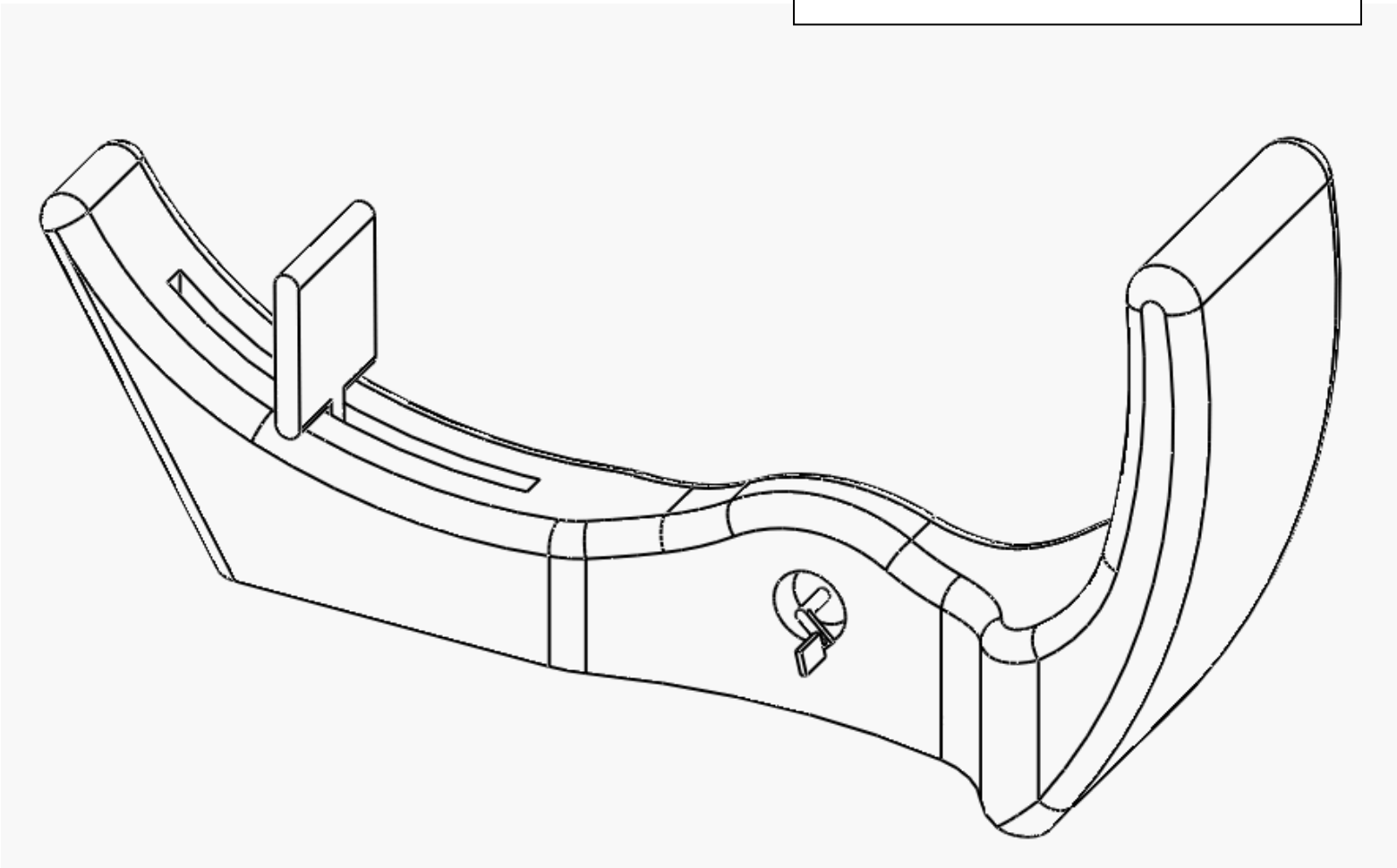

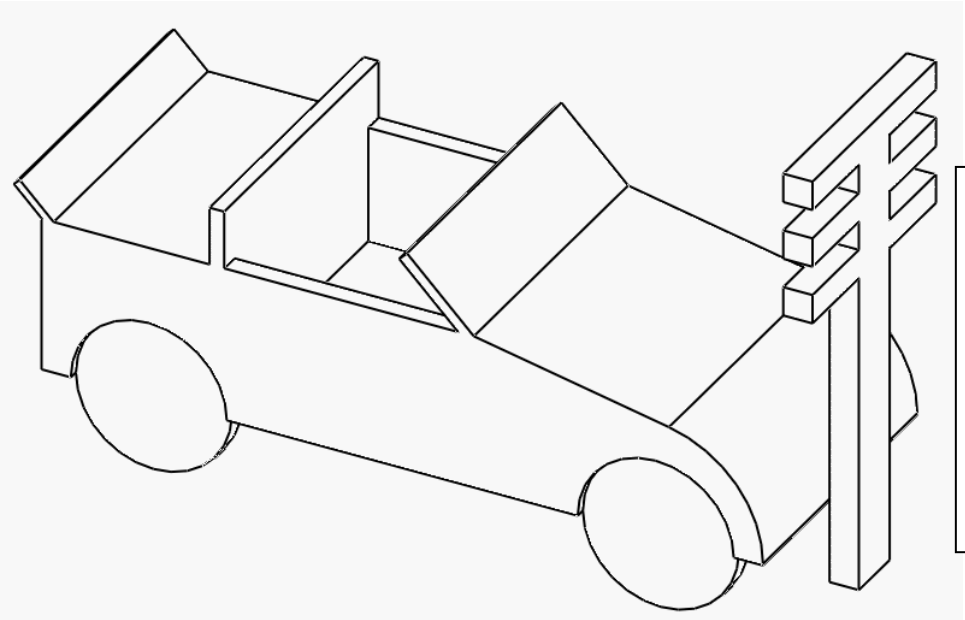

Car

- Large open bench seat or adjustable seat
- Cooler than regular bike generator
- "Efficiency Race"
- Kids and adults

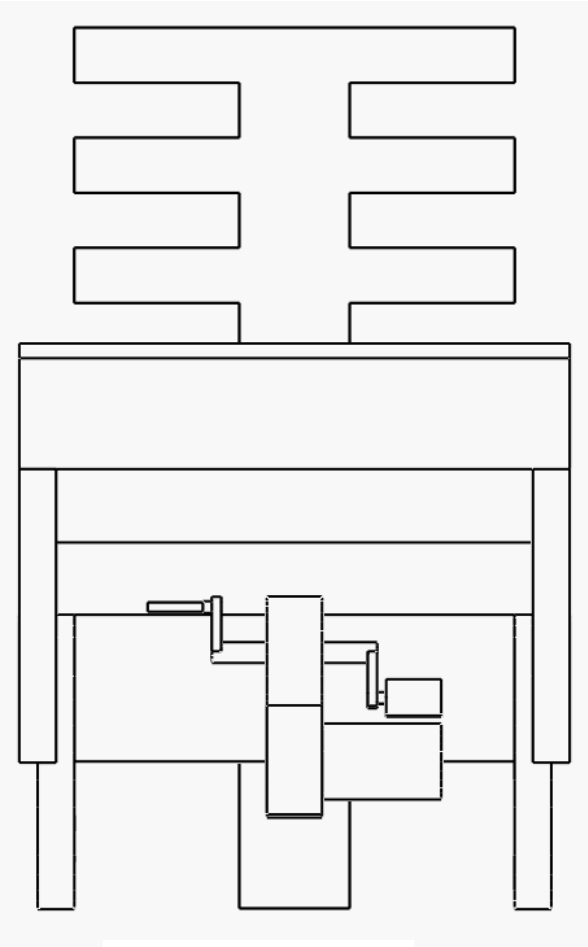

Section View from seat of car

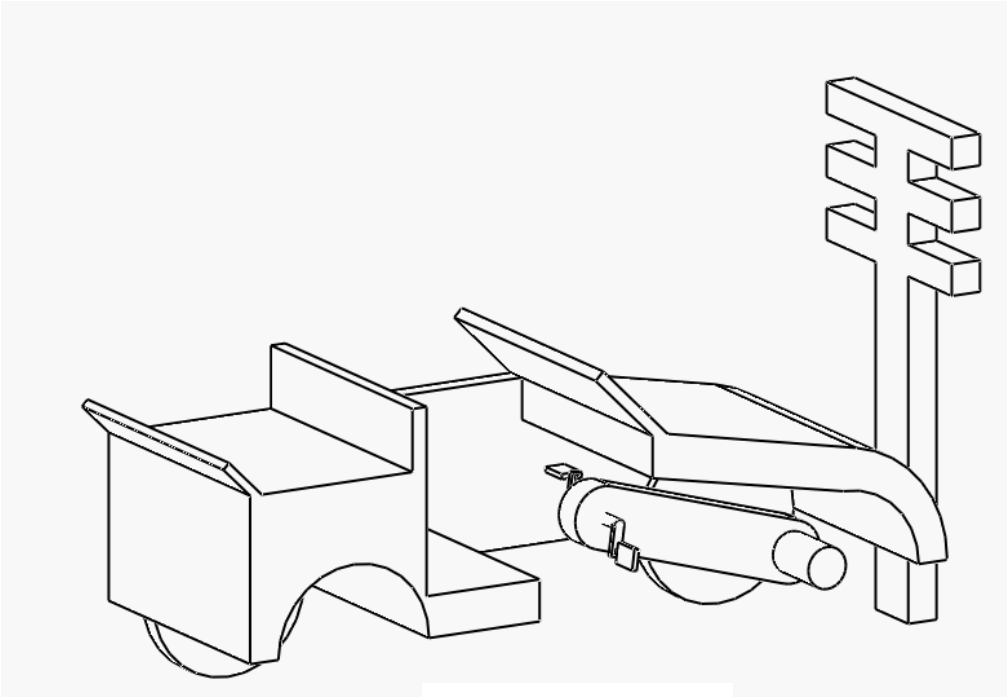

Side Section View

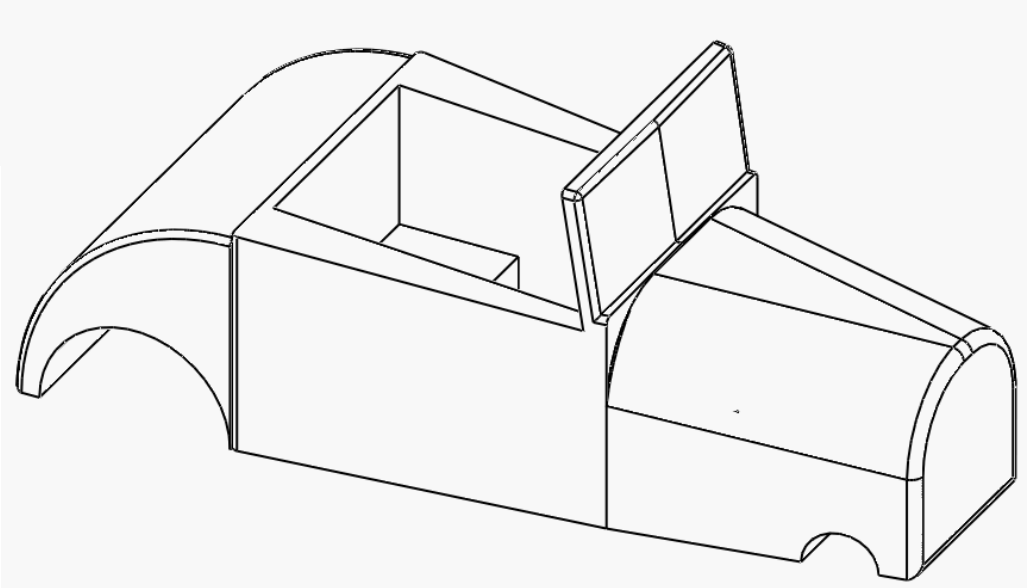

Appendix A - Pugh Matrix

Pugh Concept Selection Matrix	Concepts				
	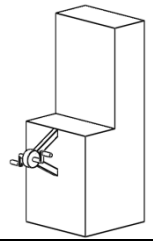	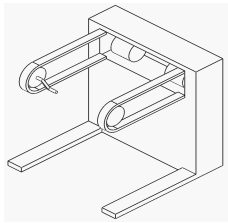	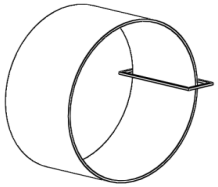		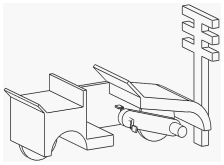
Criteria	Wall Mounted Hand Crank	Non Wall Mounted Hand Crank	Hamster Wheel	Foot Pedal Bicycle	Pedal Car
Kinesthetic feedback	DATUM	S	-1	S	S
Safe Operation		S	-1	S	S
Ease of Production		S	-1	-1	-1
Budget Capabilities		S	-1	S	S
Entertaining Operation/Interface		S	+1	+1	+1
Exhibit Placement Variability		+1	-1	+1	+1
Exhibit Aesthetic		S	S	S	+1
Σ+	0	1	1	2	3
Σ-	0	0	5	1	1
ΣS	0	6	1	4	3

Appendix B - Drawing Packet

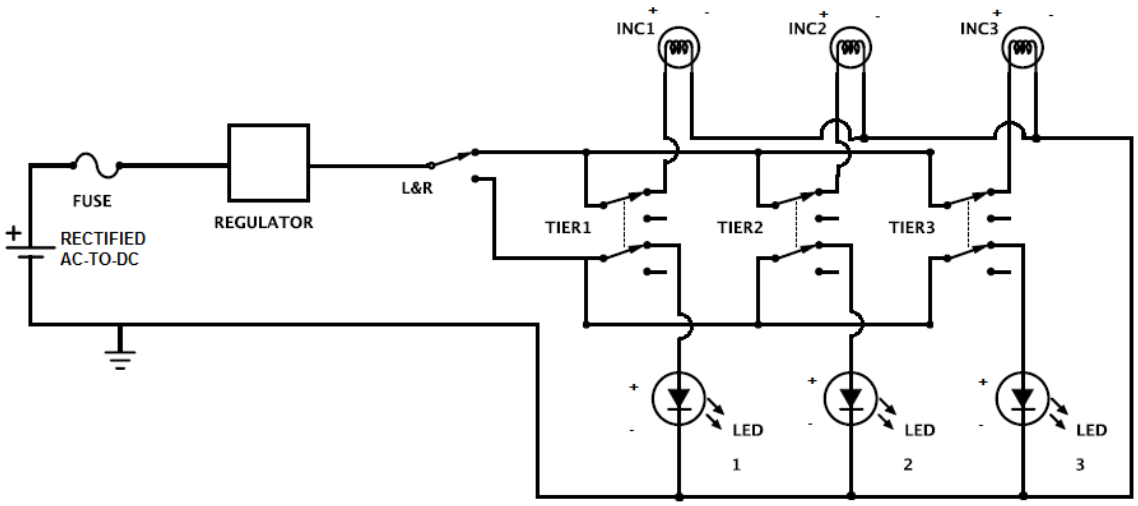

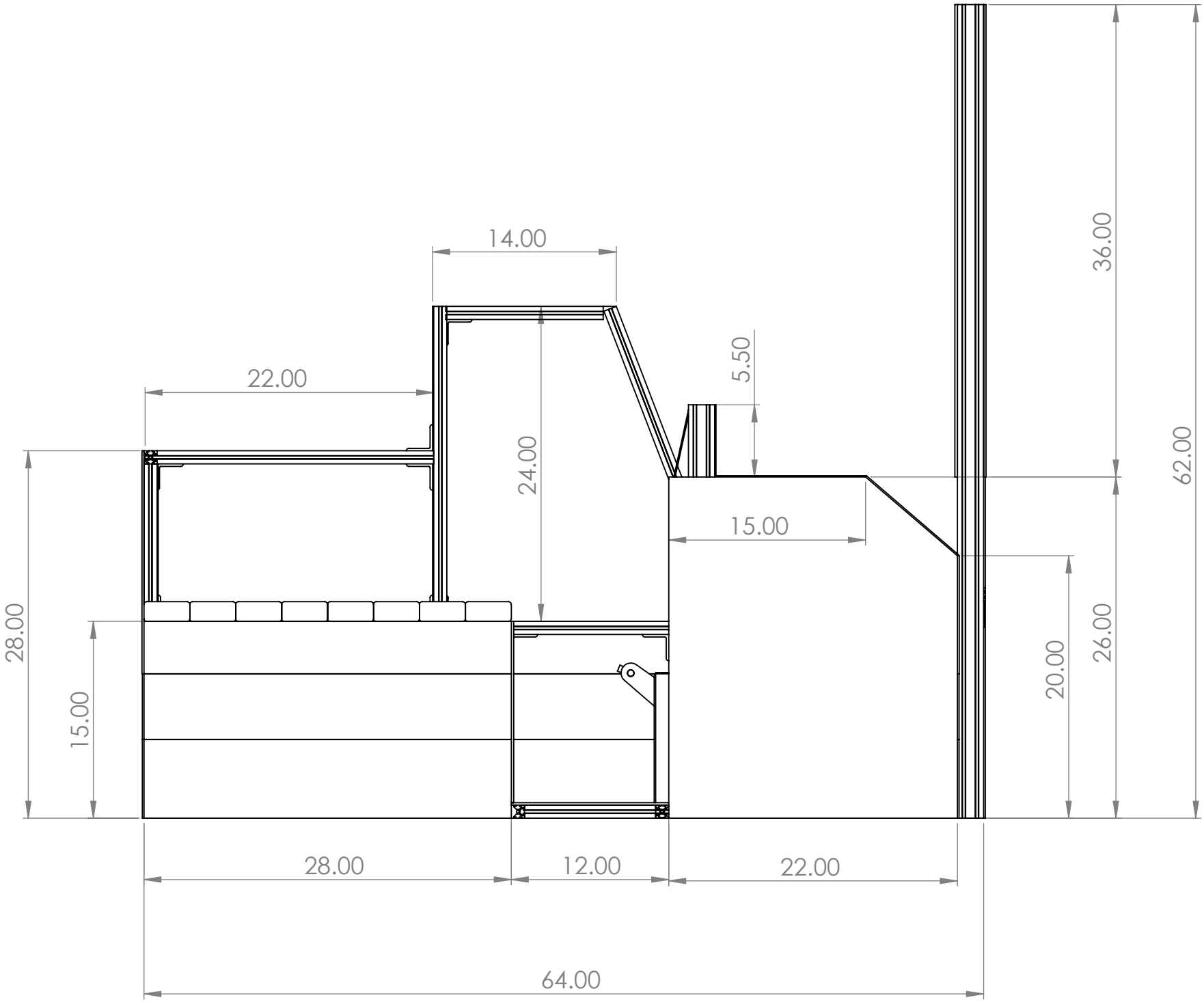
14.00
22.00
24.00
5.50
15.00
36.00
62.00
28.00
15.00
20.00
26.00
28.00
12.00
22.00
64.00

SCALE 1 : 10

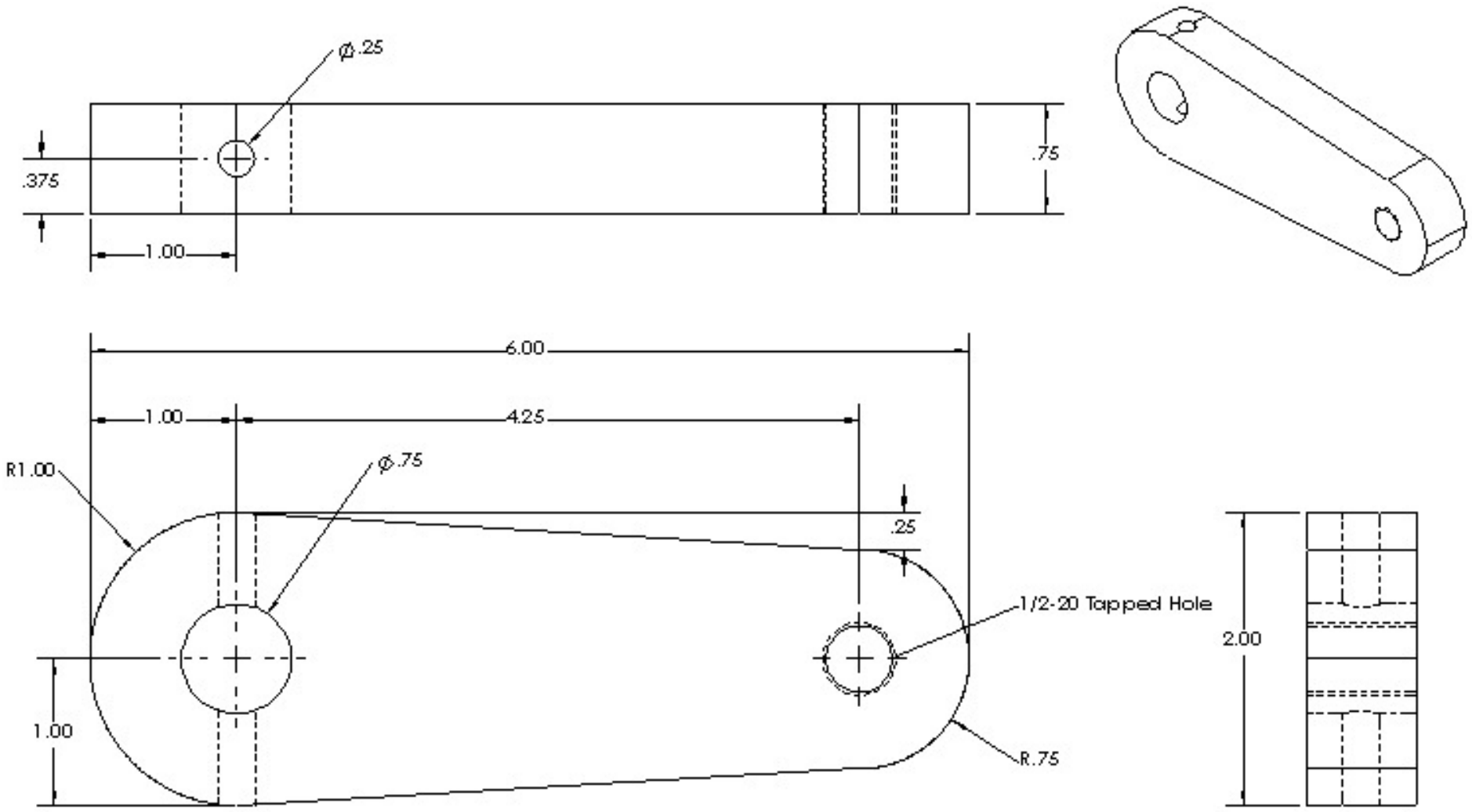

Mechanical Engineering CAL POLY	SCALE: 1:1	LEC SEC:	TITLE: CRANK ARM
	UNITS: INCHES	LAB SEC:	MATERIAL: ALUMINUM
	NEXT ASSY:	TOLERANCE:	NAME: CHRIS CHARFF
	DWG #:	DATE:	SIGNATURE:

5 4 3 2 1

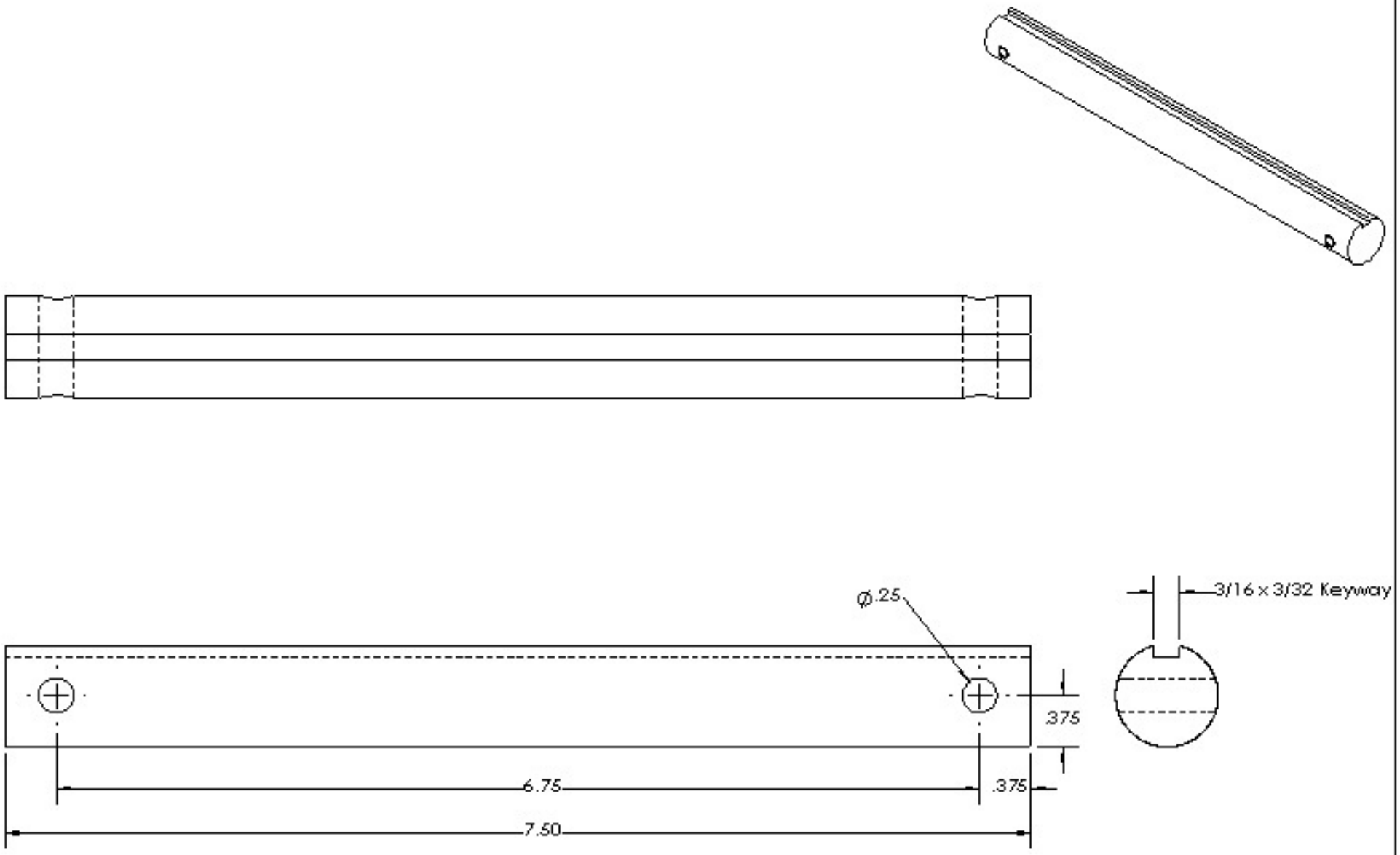

Mechanical Engineering CAL POLY	SCALE: 1:1	LEC SEC:	TITLE: PEDAL SHAFT
	UNITS: INCHES	LAB SEC:	MATERIAL: STEEL
	NEXT ASSY:	TOLERANCE:	NAME: CHRIS CHARFF
	DWG #:	DATE:	SIGNATURE:

5 4 3 2 1

Appendix B - BOM

Bill of Materials

Vendor	Part #	Description	Size	Quantity	Price	Total
T-Slots	650000 TS 10-10	Aluminum extrusion	8	2	0.248	3.968
T-Slots	650000 TS 10-10	Aluminum extrusion	12	9	0.248	26.784
T-Slots	650000 TS 10-10	Aluminum extrusion	14	2	0.248	6.944
T-Slots	650000 TS 10-10	Aluminum extrusion	19	2	0.248	9.424
T-Slots	650000 TS 10-10	Aluminum extrusion	20	4	0.248	19.84
T-Slots	650000 TS 10-10	Aluminum extrusion	24	7	0.248	41.664
T-Slots	650000 TS 10-10	Aluminum extrusion	26	11	0.248	70.928
T-Slots	650000 TS 10-10	Aluminum extrusion	32	1	0.248	7.936
T-Slots	650002 TS 10-20	Aluminum extrusion	13	8	0.421	43.784
T-Slots	650002 TS 10-20	Aluminum extrusion	24	5	0.421	50.52
T-Slots	650002 TS 10-20	Aluminum extrusion	26	1	0.421	10.946
T-Slots	650002 TS 10-20	Aluminum extrusion	62	2	0.421	52.204
T-Slots	650000 TS 10-10	Aluminum extrusion	8	2	0.248	3.968
T-Slots	650000 TS 10-10	Aluminum extrusion	5.5	2	0.248	2.728
T-Slots	650000 TS 10-10	Aluminum extrusion	5	2	0.248	2.48
T-Slots	650000 TS 10-10	Aluminum extrusion	3	2	0.248	1.488
T-Slots	650000 TS 10-10	Aluminum extrusion	22	2	0.248	10.912
T-Slots	650000 TS 10-10	Aluminum extrusion	18	3	0.248	13.392
T-Slots	650000 TS 10-10	Aluminum extrusion	15	2	0.248	7.44
T-Slots	650000 TS 10-10	Aluminum extrusion	11.5	4	0.248	11.408
T-Slots	650000 TS 10-10	Aluminum extrusion	10	2	0.248	4.96
T-Slots	650000 TS 10-10	Aluminum extrusion	13	3	0.248	9.672
T-Slots	650000 TS 10-10	Aluminum extrusion	24	2	0.248	11.904
T-Slots	650000 TS 10-10	Aluminum extrusion	26	2	0.248	12.896
T-Slots	650002 TS 10-20	Aluminum extrusion	5	2	0.421	4.21
T-Slots	650002 TS 10-20	Aluminum extrusion	10	2	0.421	8.42
T-Slots	653052	L-Brackets		84	4.367	366.828
T-Slots	653051	Double L-Brackets		8	5.728	45.824
T-Slots	653100	4 hole plates		6	5.161	30.966
T-Slots	653085	90 deg L-Braces		18	6.805	122.49
T-Slots	651490	1/4 - 20 x 1/2 (2) + Double Economy T-nut		200	0.953	190.6
T-Slots	651142	1/4 - 20 x 1/2 Flanged(2) + Double Economy T-nut		30	1.021	30.63
T-Slots	651144	1/4 - 20 x 1/2 Flanged(3) + Triple Economy T-nut		18	1.645	29.61
T-Slots	651166	1/4 - 20 x 3/8 Flanged + Economy T-nut		207	0.488	101.016
T-Slots	651130	1/4 - 20 x 1/2 Flanged + Economy T-nut		23	0.533	12.259

T-Slots	53056	3/16" 2 Hole Inside Corner Bracket		30	4.367	131.01	
T-Slots	651171	1/4 - 20 x 1/2" BHSCS & Economy T-Nut		60	0.533	31.98	Cost of
T-Slots	653045	4 Hole Inside Corner Bracket		35	4.367	152.845	T-Slots
T-Slots	651142	1/4 - 20 x 1/2" FBHSCS & Double Economy T-Nut		78	1.021	79.638	Donated
T-Slots	653100	4 Hole Joining Plate		4	5.161	20.644	1797.16
Tap Plastics		Acrylic Sheet Blue (1/8" thick)	15x26	1	19.36	19.36	
Tap Plastics		Acrylic Sheet Blue (1/8" thick)	14x26	1	18.07	18.07	
Tap Plastics		Acrylic Sheet Blue (1/8" thick)	10x26	1	12.91	12.91	
Tap Plastics		Acrylic Sheet Blue (1/8" thick)	9x26	1	11.62	11.62	
Tap Plastics		Acrylic Sheet Blue (1/8" thick)	15x21	1	15.64	15.64	
Tap Plastics		Acrylic Sheet Blue (1/8" thick)	23x17	1	19.41	19.41	
Tap Plastics		Acrylic Sheet Blue (1/8" thick)	27x19	1	25.47	25.47	
Tap Plastics		Acrylic Sheet Blue (1/8" thick)	26x17	1	21.95	21.95	
Tap Plastics		Acrylic Sheet Blue (1/8" thick)	4x28	1	10.00	10.00	
Tap Plastics		Acrylic Sheet White (1/8" thick)	5x28	1	10.00	10.00	
Tap Plastics		Acrylic Sheet White (1/8" thick)	5x26	1	15.62	15.62	
Tap Plastics		Acrylic Sheet White (1/8" thick)	5x27	1	16.22	16.22	
Tap Plastics		Acrylic Sheet White (1/8" thick)	5x14	1	10.00	10.00	
Tap Plastics		Acrylic Sheet White (1/8" thick)	5x21	1	10.00	10.00	
Tap Plastics		Acrylic Sheet Black (1/8" thick)	6x26	1	18.74	18.74	
Tap Plastics		Acrylic Sheet Black (1/8" thick)	6x28	1	10.09	10.09	
Tap Plastics		Acrylic Sheet Black (1/8" thick)	6x27	1	10.00	10.00	
Tap Plastics		Acrylic Sheet Black (1/8" thick)	6x14	1	10.00	10.00	
Tap Plastics		Acrylic Sheet Black (1/8" thick)	6x21	1	10.00	10.00	
Tap Plastics		Acrylic Sheet Clear (3/16" thick)	22x26	1	26.42	26.42	
Tap Plastics		Acrylic Sheet Clear (3/16" thick)	26x26	1	31.22	31.22	
Windy Nation	WGN-PMAO-75	WindTura 750 Permanent Magnet Alternator		1	342.56	342.56	
C.W. Shaw, Inc.		3-Phase AC to 12 VDC regulator		1	200.00	200.00	
McMaster-Carr	2500T123	Generator Sprocket	16 teeth	1	13.11	13.11	
McMaster-Carr	5913K63	Stamped-Steel Mounted Ball Bearing		4	11.78	47.12	
McMaster-Carr	6261K172	Ansi Roller Chain #35	3 ft	1	9.42	9.42	
McMaster-Carr	6261K172	Ansi Roller Chain #35	4 ft	1	12.56	12.56	
McMaster-Carr	1497K115	Fully keyed 1045 Steel drive shaft	6 in	1	14.24	14.24	
McMaster-Carr	1497K116	Fully keyed 1045 Steel drive shaft	9 in	1	19.70	19.70	
McMaster-Carr	6280K343	Steel Finished-bore sprocket for #35 chain	12 teeth	2	11.63	23.26	
McMaster-Carr	8975K78	Multipurpose 6061 Aluminum	3/4 x 2 x 12 in	2	8.71	17.42	
McMaster-Carr	8001K12	High-amp toggle switch DPDT		4	27.33	109.32	
McMaster-Carr	47065T162	Extrusion Panel Hinge		8	9.15	73.20	
McMaster-Carr	6236K117	Steel Finished-bore sprocket for #35 chain	32 teeth	1	35.59	35.59	
McMaster-Carr	97855A260	Mil Spec slotted spring pin (10 pack)	1/4 dia x 2 in	1	10.81	10.81	

McMaster-Carr	98535A140		Spring Steel standard key stock	3/16 x 3/16 x 12 in	1	2.77	2.77
Home Depot			Lightbulb base		6	1.28	7.68
Home Depot			Acrylic sheet .22 in thick	26 x 36 in	1	54.97	54.97
Home Depot			Acrylic sheet .093 in thick	27 x 36 in	1	23.43	23.43
Home Depot			1/2" x 5' PEX pipe		1	1.86	1.86
Home Depot			8-Circuit Terminal Block	22-10awg, 30A	1	7.47	7.47
Home Depot			12-10awg Ring Terminals	50pk	1	6.97	6.97
Home Depot			12-10awg Spade Terminals	50pk	1	4.37	4.37
Amazon			E26 12V LED light bulbs		4	11.49	45.96
Amazon (Maxpower)		5890	10-Inch Steering Wheel for Go-karts		1	20.00	20.00
Sky River RV			12V 25W Incandecent Bulbs		3	10.78	32.34
Miner's Ace Hardware			1/4-20 x 3" Hex Bolts		14	0.35	4.90
Miner's Ace Hardware			1/4-20 x 1" Button-Head Socket Cap Screws		3	0.51	1.53
Miner's Ace Hardware			1/4" washers		14	0.09	1.26
Miner's Ace Hardware			1/4" lock washers		14	0.09	1.26
Miner's Ace Hardware			1/4" lock washers		3	0.11	0.33
Miner's Ace Hardware			1/4-20 nuts		14	0.09	1.26
Miner's Ace Hardware			1/4-20 nuts		3	0.19	0.57
Miner's Ace Hardware			#8-32 Machine Screws		12	0.12	1.44
Miner's Ace Hardware			#8 washers		12	0.09	1.08
Miner's Ace Hardware			#8 lock washers		12	0.09	1.08
Miner's Ace Hardware			#8-32 nuts		12	0.09	1.08
Miner's Ace Hardware			1/2-13 x 1" Hex Bolt		1	0.94	0.94
Miner's Ace Hardware			1/2-13 nut		1	0.50	0.50
Miner's Ace Hardware			1/2" lock washer		1	0.23	0.23
Miner's Ace Hardware			1/2-20 x 4.5" Hex Bolt		2	3.19	6.38
Miner's Ace Hardware			1/2-20 Jam nut		4	0.60	2.40
Miner's Ace Hardware			Rubber Vinyl Black Mat	27" x 12"	1	2.99	2.99
Miner's Ace Hardware			10awg stranded wire	Red	30	0.59	17.70
Miner's Ace Hardware			10awg stranded wire	Black	30	0.59	17.70
Miner's Ace Hardware			10awg stranded wire	Blue	15	0.59	8.85

	Grand Total
with T-Slots Cost included	3339.51
with donated T-Slots Cost removed	1542.35

Appendix C - List of Vendors and Contact Information

Vendor	Website	Contact
T-SLOTS	www.tslots.com	aevans@futuraind.com
McMaster-Carr	www.Mcmaster.com	la.sales@mcmaster.com
Tap Plastics	www.tapplastics.com	info@tapplastics.com
Windy Nation	www.windynation.com	info@windynation.com
C.W. Shaw, Inc.		cshaw@cwshaw.org
Home Depot	www.homedepot.com	

Appendix D - Vendor supplied Component Specifications and Data Sheets

WINDTURA 750 PMA SPECIFICATIONS

Specifications

- Perfect for charging 12 and 24 volt battery banks or a grid tie
- Alternator produces 3-phase AC electricity (more efficient than DC electricity)
- Threaded shaft is designed to fit hubs with a 5/8 inch diameter center hole

About the Windtura 750 Magnetic Rotor and Copper Stator

- 8 large #42H neodymium magnets. Composed mainly of Neodymium (Nd), Iron (Fe) and Boron (B), most powerful permanent magnets on earth
- Hardened steel shaft. The shaft is coated with a polyurethane clear coat for protection.
- Magnetic rotor is completely coated and sealed with an epoxy paint
- Completely sealed bearings for long life
- Windtura 750 Copper Stator weighs over 10 pounds (4.5 kg)
- Oversized stator for maximum power output

About the Windtura 750 Housing

- Upgraded 304 stainless steel front and back covers
- 6061 extruded aluminum body
- Housing completely seals/protects copper stator and magnetic rotor
- Excellent corrosion resistance and heat dissipation

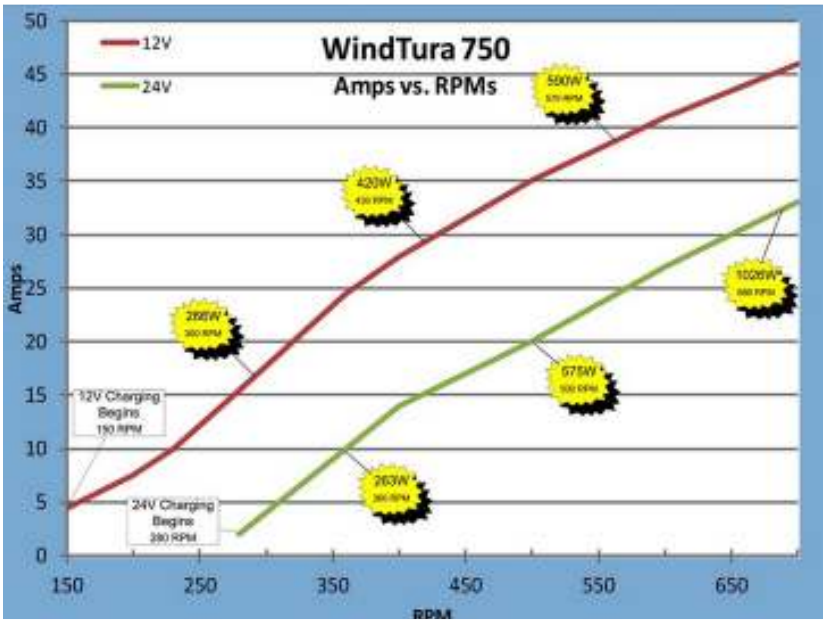

TSLOTS ALUMINUM EXTRUSION SPECIFICATIONS

- Yield strength (0.2% proof test) – Mpa = 200 Ksi = 29
- Tensile strength – Mpa = 230 Ksi = 33
- Elongation A5 minimum 10%
- Elongation A10 minimum 8%
- Elasticity E approximately 10×10^6 psi or 10,000,000 psi (or lbs/sq. in)
- Hardness – Webster Model “B” 11-12
- Flatness – .004” per inch of width
- Straightness – .0125” per foot of length, not to exceed .120 over 20 feet of length
- Twist – Twist per foot of length does not exceed .25 degrees and total twist over 20 feet of length does not exceed 1.5 degrees.

80/20® Inc.
*The **Industrial** Erector Set®*
THE STANDARD

T-Slotted Aluminum Profile Compatibility Code*

How to find parts compatible with the T-slotted profile you are currently using:

1. Not all T-slotted profiles are created equal. Not only are there numerous outside dimensions, fractional and metric, but there are also differences in T-slot dimensions. The opening of the slot is the critical dimension when determining part/profile compatibility.
2. Certain fasteners, parts and accessories are designed to work with only one particular slot dimension, while others are compatible with more than one slot size.
3. Series designations such as 10, 15, 20, 25, 30, 40, 45 etc. refer to overall outside dimensions of the profile and/or center-to-center dimensions of two T-slots.
4. The critical slot opening dimensions mentioned above are stated in millimeters. They include openings of 5, 6, 8, 10, 11 and 12 mm.

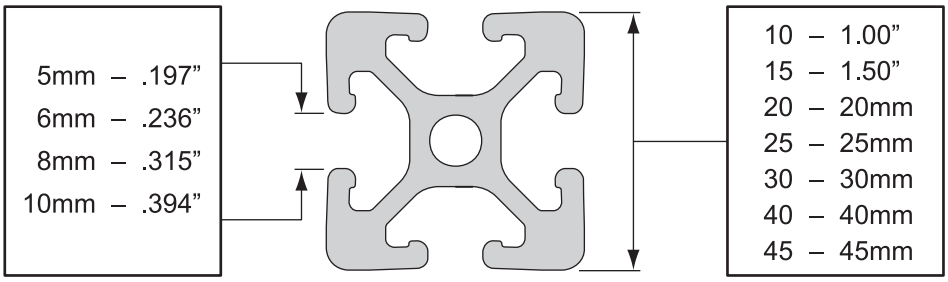

5. To determine compatibility the slot opening and profile series must be known. This will establish the compatibility code, which is listed for every part.

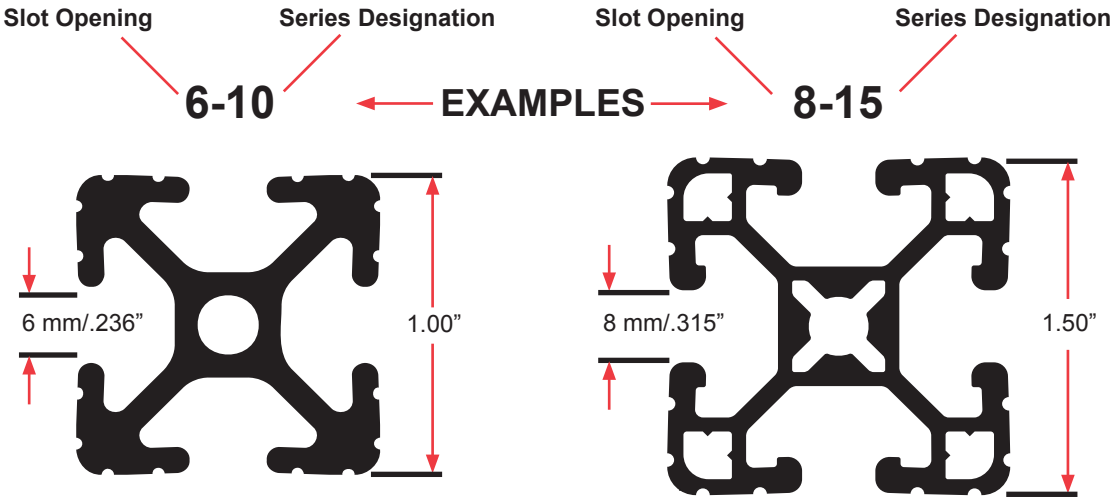

* Patent Pending

Copyright © 2012 80/20 Inc. All rights reserved.

We specialize in FAST™ *same day shipments!*

Why Do We Use 6105-T5 Aluminum Alloy?

Aluminum Profile Alloys: Number and Characteristics	Tensile Strength - ksi*			
	Ultimate		Yield	
	minimum	maximum	minimum	maximum
6105-T5 (80/20's Alloy)	38.00	• •	35.00	• •
6063-T6	30.00	• •	25.00	• •

*Figures based on material thickness of 0.125 to 1.00"
From The Aluminum Extrusion Manual, published by The Aluminum Association and the Aluminum Extruders Council.

All of 80/20's T-slotted profiles feature the 6105-T5 alloy. An aluminum extrusion alloy is a mixed metal that includes other elements such as copper, magnesium, iron, silicon or zinc. Certain properties such as strength, machinability and corrosion resistance are influenced by the choice of alloy and temper. **Alloy 6105 with a T5 temper, chosen by 80/20, has better machinability and strength than 6063-T6.**

6105 ↑ **Alloy** **T5** ↑ **Temper**

Material Strength Specifications

Minimum Yield Strength In Pounds

- 80/20®'s 6105-T5 alloy yield strength of 35,000 psi compares to A36 carbon steel's yield strength of 36,000 psi.
- Volume for volume, aluminum weighs about 1/3 as much as iron, steel, copper, or brass.

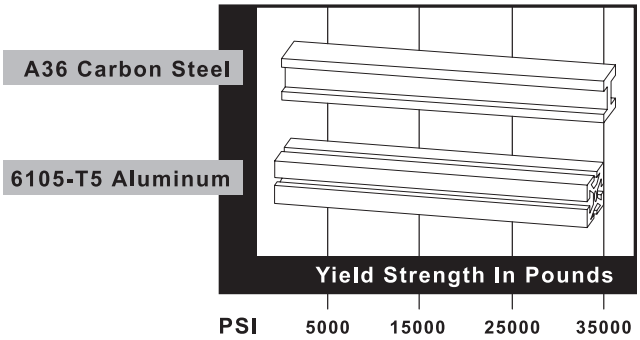

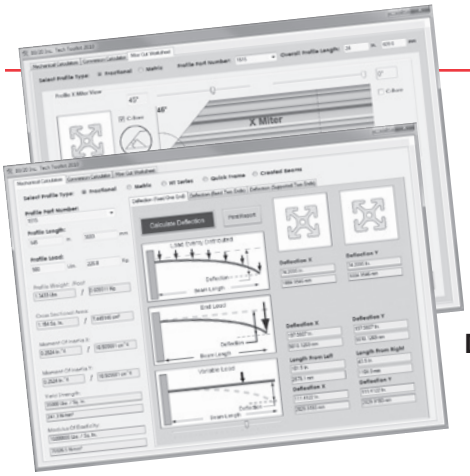

Download 80/20®'s FREE Tech Toolkit, the profile strength calculator.

80/20® Inc. Tech Toolkit™ v. 1.1

www.8020.net/design-tools-1s.asp

80/20® Inc.
*The **Industrial** Erector Set®*
THE STANDARD

Simple Beam Deflection Calculations

Use the formulas listed below to find the worst case deflection for a beam:

Formula A

$$\frac{L^3 \cdot W}{48 \cdot E \cdot I} = D$$

This formula will yield worst case deflection for a beam supported at both ends with the load centered over the span.

Formula B

$$\frac{5L^3 \cdot W}{384 \cdot E \cdot I} = D$$

This formula will yield worst case deflection for a beam supported at both ends with the load evenly distributed over the span.

Formula C

$$\frac{L^3 \cdot W}{3 \cdot E \cdot I} = D$$

This formula will yield worst case deflection for a beam fastened at one end and cantilevered horizontally with the load applied at the end of the beam.

Example Using Formula A:

Using the 1515 T-slotted profile, a length of 30.0”, and an applied force of 50 lbs., you should find the approximate beam deflection to be .011”.

Formula Reference:

L = Length in Inches
W = Load in Pounds
E = Modulus of Elasticity (10,200,000)
D = Deflection in Inches
I = Moment of Inertia (see material specifications on pages 156-158)

Fractional Profile Standards

- **Yield strength 35,000 lbs. /sq. in. minimum**
- **Tensile strength 38,000 lbs. /sq. in. minimum**
- **Elongation A5 minimum 10%**
- **Elongation A10 minimum 8%**
- **Elasticity E approximately 10,200 k lbs./sq.in.**
- **Rockwell hardness approximately E-88**
- **Extrusion conforming to DIN 17 615 specifications**
- **Twist per foot of length not to exceed .25 degree and total twist over 20 feet of length not to exceed 1.5 degrees**
- **Flatness .004" per inch of width**
- **Straightness 0.0125" per foot of length, not to exceed .120” over 20 feet of length**
- **Unless otherwise specified, all profiles will have etch and clear (MIL-A-8625F) anodizing with depth of .0004" and surface hardness of approximately 250 HV (anodized profiles should not be welded because of toxic fumes)**

We specialize in FAST™ *same day shipments!*

Torque Specifications

- **See table below for the amount of torque in foot-lbs. required to activate the 2º drop-lock feature for T-slotted profiles**
- **Nut and bolt combination is pre-loaded when tightened to the minimum torque rating**
- **When properly tightened, fasteners will not loosen even under heavy vibration**

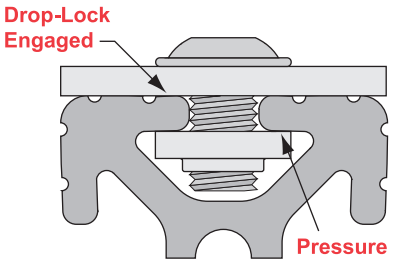

Part Number	Fastener Description	Tested Profile	Minimum Ft-lbs. Torque	Maximum Ft-lbs. Torque
3320	5/16-18 x 11/16 Flanged BHSCS & Economy T-Nut	1515	10.00	15.00
3325	5/16-18 x 3/4 Economy T-Slot Stud, Washer & Hex Nut	1515	25.00	30.00
3360	15 Series Anchor Fastener Assembly	1515-Lite	10.00	20.00
3380	15 Series End Fastener Assembly	1515-Lite	10.00	22.00
3321	1/4-20 x 1/2 Flanged BHSCS & Economy T-Nut	1010	4.00	6.00
3395	10 Series Anchor Fastener Assembly	1010	3.00	17.00
3381	10 Series End Fastener Assembly	1010	4.00	17.00

Fastener Application Tests

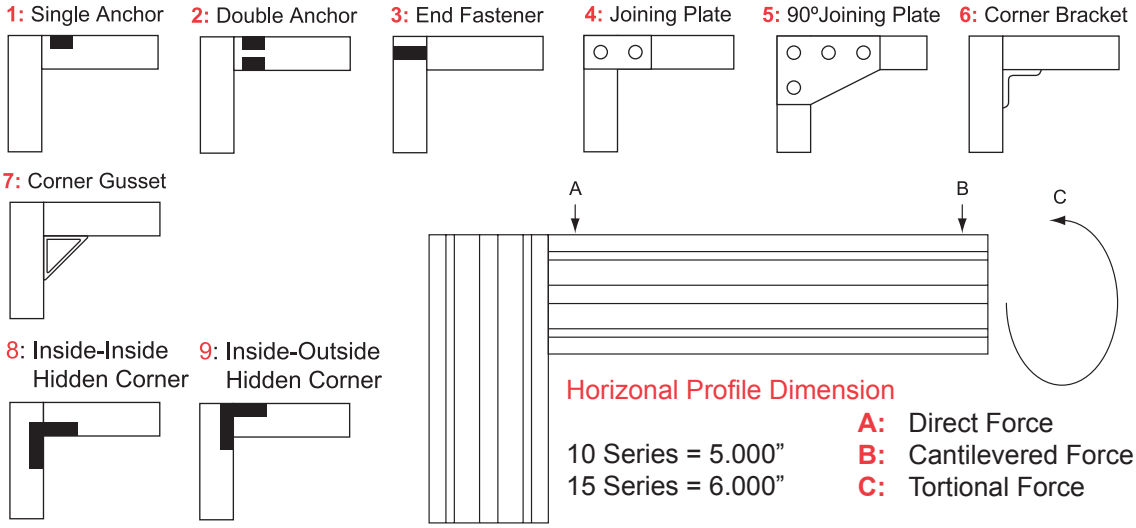

Fastener	1010 Profile			1515-Lite Profile			1515 Profile		
	A (lbs.)	B (lbs.)	C (Inch-lbs.)	A (lbs.)	B (lbs.)	C (Inch-lbs.)	A (lbs.)	B (lbs.)	C (Inch-lbs.)
1	500	250	180	950	625	540	950	1,000	700
2	900	250	260	1,200	700	1,150	1,200	1,200	2,000
3	450	200	325	1,000	500	680	1,000	820	1,150
4	175	50	400	225	200	1,000	225	200	1,100
5	175	50	500	250	200	1,120	250	200	1,260
6	325	75	180	375	225	500	575	225	500
7	325	220	260	375	750	500	575	750	500
8	N/A	N/A	N/A	50	50	50	N/A	N/A	N/A
9	N/A	N/A	N/A	240	220	240	N/A	N/A	N/A

Note: Plates, brackets and gussets were attached with 80/20® recommended bolt kits. Fasteners were tightened according to 80/20 torque specifications found at the top of the page.

Test results reflect the connection failure point. Loads at or above these points are not recommended.

80/20® Inc.
*The **Industrial** Erector Set®*
THE STANDARD

10 Series Profile Material Specifications

1010
.4379 Sq. In.

1012
.4280 Sq. In.

2012
.5653 Sq. In.

1020
.7914 Sq. In.

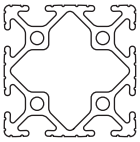
2020
1.2079 Sq. In.

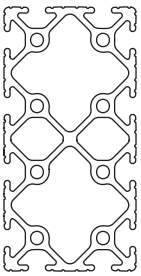
2040
2.2462 Sq. In.

1001
.5069 Sq. In.

1002
.4834 Sq. In.

1050
.3161 Sq. In.

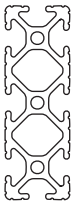
1030
1.1596 Sq. In.

1003
.4582 Sq. In.

1004
.4819 Sq. In.

Compatibility Code*: 6-10

Part No.	1010	1001	1002	1003	1004	1012
Material	6105-T5 Aluminum					
Finish	Clear Anodize #204-R1					
Weight Per Foot	.5097 Lbs.	.5900 Lbs.	.5627 Lbs.	.5333 Lbs.	.5609 Lbs.	.4982 Lbs.
Stock Length **	97", 145", 242"	145" or 242"	145" or 242"	145" or 242"	145" or 242"	145" or 242"
Moment of Inertia	IX=.0442"^{4} IY=.0442"^{4}	IX=.0493"^{4} IY=.0542"^{4}	IX=.0492"^{4} IY=.0492"^{4}	IX=.0441"^{4} IY=.0491"^{4}	IX=.0443"^{4} IY=.0541"^{4}	IX=.0400"^{4} IY=.0400"^{4}
Estimated Area	.4379 Sq. In.	.5069 Sq. In.	.4834 Sq. In.	.4582 Sq. In.	.4819 Sq. In.	.4280 Sq. In.
Modulus of Elasticity	10,200,000 Lbs./Sq. In.					

Part No.	1050	2012	1020	1030	2020	2040
Material	6105-T5 Aluminum					
Finish	Clear Anodize #204-R1					
Weight Per Foot	.3679 Lbs.	.6580 Lbs.	.9212 Lbs.	1.3498 Lbs.	1.4060 Lbs.	2.6146 Lbs.
Stock Length **	145"	145"	97", 145", 242"	145" or 242"	145" or 242"	145" or 242"
Moment of Inertia	IX=.0074"^{4} IY=.0323"^{4}	IX=.2253"^{4} IY=.0146"^{4}	IX=.3078"^{4} IY=.0833"^{4}	IX=.9711"^{4} IY=.1238"^{4}	IX=.5509"^{4} IY=.5509"^{4}	IX=3.5168"^{4} IY=1.0513"^{4}
Estimated Area	.3161 Sq. In.	.5653 Sq. In.	.7914 Sq. In.	1.1596 Sq. In.	1.2079 Sq. In.	2.2462 Sq. In.
Modulus of Elasticity	10,200,000 Lbs./Sq. In.					

* See Compatibility Code information on page 152.

** For profile lengths other than stock length refer to page 563 for profile cut to length services.

We specialize in FAST™ *same day shipments!*

1010 T-Slotted Profile - 10 Series

- Compatible with all 10 Series fasteners
- Four open T-slots for mounting accessories
- 1010 is ideal for machine guards, sound enclosures, work benches, displays and panel mount racks
- Compatibility Code*: 6-10

VIBRATION PROOF™**

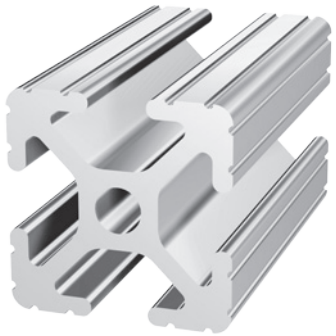

Part No.	1010
Material	6105-T5
Finish	Clear Anodized
Weight Per Foot	.5097 Lbs.
Stock Length (+/- .125")	97" - Part No. 1010-97 145" - Part No. 1010-145 242" - Part No. 1010-242
Moment Of Inertia	IX=.0442"^{4} IY=.0442"^{4}
Estimated Area	.4379 Sq. In.

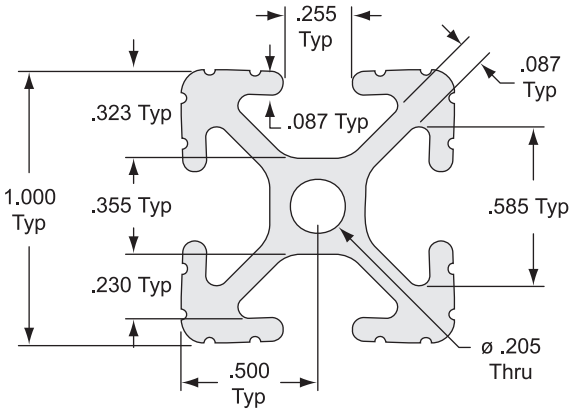

Quick Machining Reference

Machining Service	Service Number
Cut to Length	7005 (see page 563)
.218" Access Hole	7051 (see page 565)
Anchor Counterbore	7042 (see page 567)
Tap Profile End	7061 (see page 564)

Pre-Cut Lengths

48" - Part No. 1010-48	72" - Part No. 1010-72

- Pre-cut, ready to ship
- Cut to our standard tolerance of +/- .015"
- One part number, one price (includes cut charge)

Note: Look for the icon throughout the Fractional portion of this catalog. This icon points out all 10 Series compatible parts and accessories.

* See Compatibility Code information on page 152.

** See 2° Drop-Lock information on page 150.

1020 T-Slotted Profile - 10 Series

- Compatible with most 10 Series fasteners
- Six open T-slots for mounting accessories
- The center cavity can be pressurized up to 150 psi; refer to pages 451-453
- Ideal for machine guards, sound enclosures, work benches, displays and panel mount racks
- Compatibility Code*: 6-10

VIBRATION PROOF™ **

Part No.	1020
Material	6105-T5
Finish	Clear Anodized
Weight Per Foot	.9212 Lbs.
Stock Length (+/- .125")	97" - Part No. 1020-97 145" - Part No. 1020-145 242" - Part No. 1020-242
Moment Of Inertia	IX=.3078"^{4} IY=.0833"^{4}
Estimated Area	.7914 Sq. In.

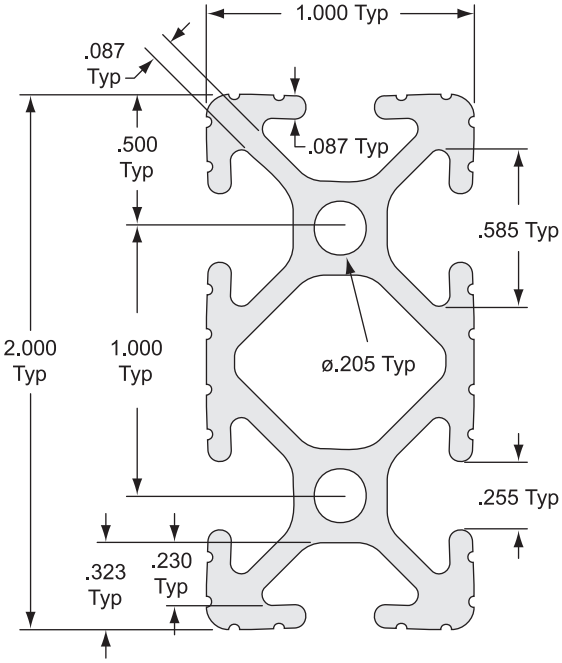

Quick Machining Reference

Machining Service	Service Number
Cut to Length	7000 (see page 563)
.218" Access Hole	7051 (see page 565)
Anchor Counterbore	7042 (see page 567)
Tap Profile End	7046 (see page 564)

Note: Look for the icon throughout the Fractional portion of this catalog. This icon points out all 10 Series compatible parts and accessories.

Pre-Cut Lengths

48" - Part No. 1020-48	72" - Part No. 1020-72

- Pre-cut, ready to ship
- Cut to our standard tolerance of +/- .015"
- One part number, one price (includes cut charge)

* See Compatibility Code information on page 150.

** See 2° Drop-Lock information on page 150.

Appendix E - Detailed Supporting Analysis, DVPR

ALUMINUM EXTRUSION DEFLECTION ANALYSIS

APPENDIX E

ANALYSIS OF ALUMINUM EXTRUSION IN "WORST CASE SCENARIO"

BEAM OF EXTRUSION SIMPLY SUPPORTED WITH POINT LOAD AT CENTER

GIVEN: $W = 300$ lbs
$L = 30$ in

6105-T5 ALUMINUM → $E_{AL} = 10{,}200{,}000$ psi
$I_{1010} = 0.0442\ in^4$
FROM 80/20 INC. FOR 1"x1" CROSS SECTION 1010 SERIES EXTRUSION

FIND: MAX DEFLECTION
δ_{max}

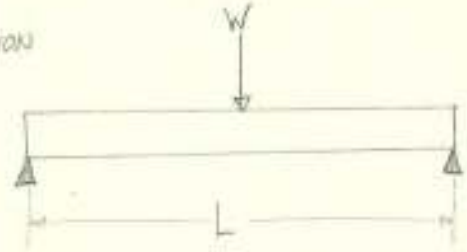

$$\delta_{max} = \frac{WL^3}{48EI}$$

$$= \frac{(300\ lbs)(30\ in)^3}{48(10{,}200{,}000\ psi)(0.0442\ in^4)}$$

$$\boxed{\delta_{max} = 0.374\ in}$$

FREE BODY DIAGRAM OF CRANK ARM TO FIND CONNECTING PIN FORCES DUE TO FORCE APPLIED AT PEDAL

Appendix E

FINDING FORCES ON CONNECTING PIN DUE TO FORCE APPLIED AT PEDAL

FBD

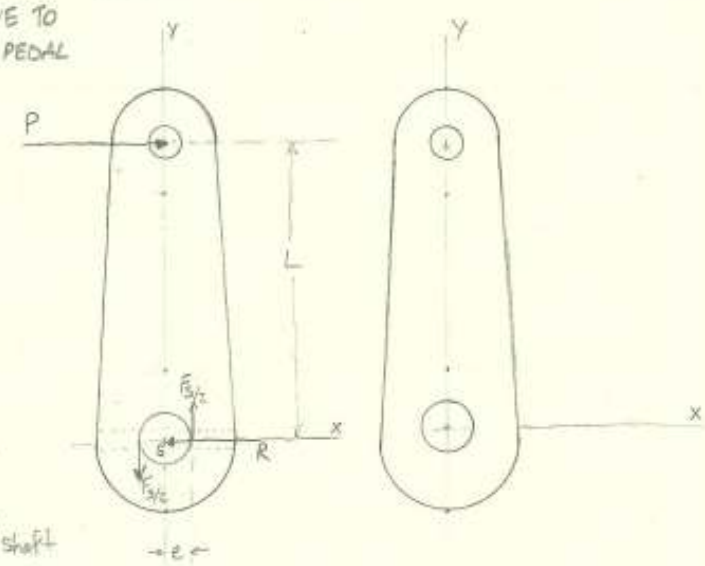

$\xrightarrow{+} \Sigma F_x = 0 \quad P - R = 0$

$+\uparrow \Sigma F_y = 0 \quad F_{S/2} - F_{S/2} = 0$

$\circlearrowleft + \Sigma M_S = 0 \quad F_S e - PL = 0$

$F_S = \frac{PL}{e}$

P = force applied at pedal

L = 4.25 inches distance between pedal and shaft

e = 0.375 inches distance from shaft center to point of analysis; OD of shaft

SHEAR FAILURE ANALYSIS OF #10-32 SCREW USED A SHAFT-CRANK CONNECTOR

Appendix E

ANALYZING FAILURE OF SHAFT-CRANK CONNECTING SCREW BASED ON SHEAR

d = 0.1517 in – minor diameter of #10-32 screw

$$\tau = \frac{F_s}{A} = \frac{F_s}{\frac{\pi}{4}d^2} \quad ; \text{ where } F_s = \frac{PL}{e}$$

for P = 100 lbf force applied at pedal
L = 4.25 in length between pedal and shaft
e = 0.375 in distance from shaft center to point of analysis; in this case at OD of shaft / ID of crank

$$\tau = \frac{4PL}{\pi e d^2}$$

$$= \frac{4(100\text{ lbf})(4.25\text{ in})}{\pi(0.375\text{ in})(0.1517\text{ in})^2}$$

$$\tau = 62{,}704 \text{ psi}$$

@ P = 200 lbf
$\tau = 125{,}408$ psi

@ P = 300 lb
$\tau = 188{,}113$ psi

For #10-32 Button Head Socket Cap Screw
Minimum tensile strength = 120,000 psi

From Industrial Fasteners Institute (Inch Fasteners Standards, 7th ed, 2003, B-8)

shear strength ≈ (0.60) min. tensile strength

≈ (0.60)(120,000 psi)

= 72,000 psi

From equation above, screw would fail in shear at 115 lbf applied at the pedal.

SHEAR FAILURE ANALYSIS ON VARIOUS BOLT AND PIN TYPES

L (in)	e (in)
4.25	0.375

	#10-32 Screw	Grade 5 Bolt	Grade 8 Bolt	Clevis Pin	Clevis Pin	Coiled Spring Pin	Slotted Spring Pin	Slotted Spring Pin
Shear Diameter (in)	0.1517	0.25	0.25	0.25	0.3125	0.25	0.25	0.3125
Rockwell Hardness	C37	C25	C33	B80	B80	C46	C43	C43
Min. Tensile Strength (psi)	120000	120000	150000	74000	74000	220000	200000	200000
Shear Strength (psi)	72000	72000	90000	44400	44400	132000	120000	120000
P (lbf) to shear failure	115	312	390	192	300	572	520	812
P (lbf)	Shear Stress (psi)							
100	62704	23088	23088	23088	14776	23088	23088	14776
150	94056	34632	34632	34632	22165	34632	34632	22165
200	125408	46176	46176	46176	29553	46176	46176	29553
250	156760	57720	57720	57720	36941	57720	57720	36941
300	188113	69264	69264	69264	44329	69264	69264	44329
350	219465	80808	80808	80808	51717	80808	80808	51717
400	250817	92352	92352	92352	59105	92352	92352	59105
450	282169	103896	103896	103896	66494	103896	103896	66494
500	313521	115440	115440	115440	73882	115440	115440	73882
550	344873	126984	126984	126984	81270	126984	126984	81270
600	376225	138528	138528	138528	88658	138528	138528	88658

PIN COUPLING ANALYSIS ON SHAFT-CRANK CONNECTION FOR 1/4" PIN

$D = 0.75\,in$ shaft

$D_1 = 2.00\,in$ Hub

$d = 0.25\,in$ pin

$T = PL = (300\,lb)(4.25\,in) = 1275\,lb\cdot in$

$K_{Sb} = 1$, $K_{Sp} = 1$ } service factor (range 1-3)

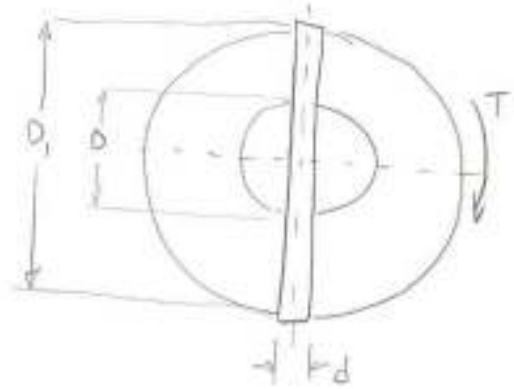

Pin Shearing Stress

$$\tau = K_{Sb}\frac{4T}{\pi d^2 D}$$

$$= (1)\frac{4(1275\,lb\cdot in)}{\pi(0.25\,in)^2(0.75\,in)}$$

$$\tau = 34652\ psi$$

Pressure on Shaft

$$P_1 = K_{Sp}\frac{6T}{d D^2}$$

$$= (1)\frac{6(1275\,lb\cdot in)}{(0.25\,in)(0.75\,in)^2}$$

$$P_1 = 54400\ psi$$

@ $P = 100\,lb$: $P_1 = 18134\ psi$

@ $P = 200\,lb$: $P_1 = 36267\ psi$

Pressure on Hub

$$P_2 = K_{Sp}\frac{4T}{d(D_1^2 - D^2)}$$

$$= (1)\frac{4(1275\,lb\cdot in)}{(0.25\,in)\left((2\,in)^2 - (0.75\,in)^2\right)}$$

$$P_2 = 5{,}935\ psi$$

Shaft Torsional Stress

$$\tau = K_{Sb}\frac{16T}{\pi D^3\left(1 - 0.9\frac{d}{D}\right)}$$

$$= (1)\frac{16(1275\,lb\cdot in)}{\pi(0.75\,in)^3\left(1 - 0.9\frac{0.25}{0.75}\right)}$$

$$\tau = 21{,}989\ psi$$

Calculation of pinned couplings

i Check lines: 3.4; 3.16;

ii ☐ Project information

Input section

1.0 ☑ Loading and basic parameters of the coupling

1.1	Calculation units		Imperial (lbf, in, HP....)	
1.2	**Coupling type : Radial pin for shaft-hub connection. Loading with torsional moment.**			

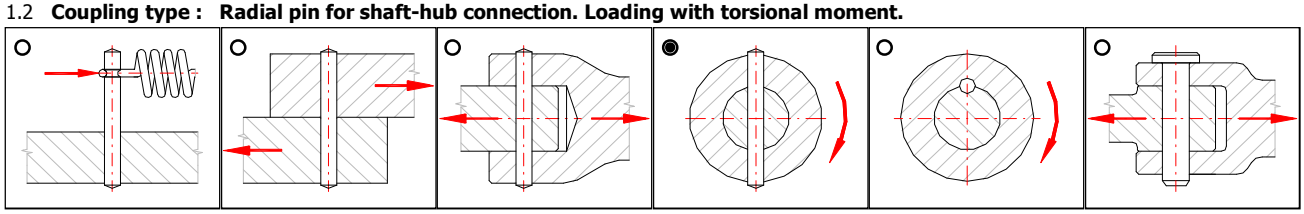

1.3	**Connection loading**			
1.4	Transferred power	P	0.10	[HP]
1.5	Shaft speed	n	15.0	[/min]
1.6	Torque	T	35.01	[lb ft]
1.7	Acting force	F	250.0	[lb]
1.8	**Operational and mounting parameters of the coupling**			
1.9	Type of loading		Static load	
1.10	Type of pin		Full pin	
1.11	Type of fit		Fixed fit	
1.12	Desired safety	s_f	2.00	

1.13	**Hub material (min. tensile strength)**			
1.14	L...Aluminum alloy (36)			☑
1.15	Ultimate tensile strength	S_{Umin}	36.0	[ksi]
1.16	Permissible pressure (fixed fit)	p_A	13.0	[ksi]
1.17	Permiss. pressure (running fit)	p_A	2.5	[ksi]
1.18	**Shaft material (min. tensile strength)**			
1.19	F...High-grade and alloy steel (100)			☑
1.20	Ultimate tensile strength	S_{Umin}	100.0	[ksi]
1.21	Permissible pressure (fixed fit)	p_A	29.0	[ksi]
1.22	Permiss. pressure (running fit)	p_A	5.0	[ksi]
1.23	Permissible torsional stress	τ_A	16.0	[ksi]

2.0 ☑ Design of coupling dimensions

2.1	**Pin selection, coupling parameters**			
2.2	ANSI B18.8.1 - Clevis pins with head and split pin hole			
2.3	Allowable range of pin diameters		0.1875 ~ 1	
2.4	Number of pins in connection		1	
2.5	**Reduction factors**			☑
2.6	Load distribution factor	K_L	1.00	
2.7	Service factor (pressure)	K_{Sp}	1.00	
2.8	Service factor (bending, shearing)	K_{Sb}	1.00	

2.9	**Pin material (min. tensile strength)**			
2.10	G...Surface-hardened steel (95) [HRC 45-53]			☑
2.11	Ultimate tensile strength	S_{Umin}	95.0	[ksi]
2.12	Permissible pressure (fixed fit)	p_A	32.0	[ksi]
2.13	Permiss. pressure (running fit)	p_A	6.0	[ksi]
2.14	Permissible shear stress	τ_A	14.5	[ksi]
2.15	Permissible bending stress	σ_A	23.0	[ksi]

2.16	**Coupling dimensions**			
2.17	Shaft diameter	D	0.7500	[in]
2.18	Hub diameter	D1	2.0000	[in]
2.19	Recommended pin diameter		0.15 ~ 0.23	[in]
2.20	Searching for a suitable pin		< Search >	
2.21	Pin diameter	d	0.2500 1/4	[in]
2.22	Allowable range of pin lengths		0.75 ~ 2.5	[in]
2.23	Pin length	L	2.2500 2.25	[in]
2.24	Min. functional length of pin	L_{fmin}	2	[in]
2.25	Functional length of pin	L_f	2.1080	[in]

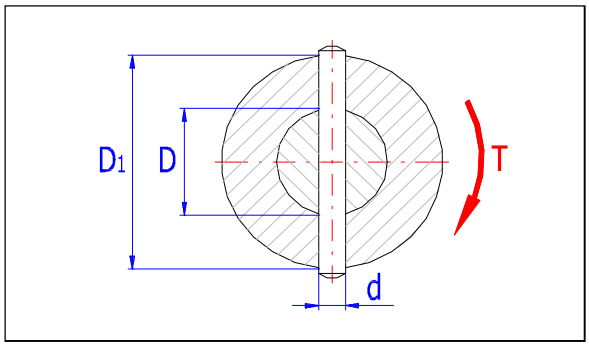

3.0 ☑ Strength checks of the coupling

3.1	**Pin check for shearing**			
3.2	Permissible shear stress	τ_A	14.5	[ksi]
3.3	Comparative stress	τ	11.4	[ksi]
3.4	Safety		**1.27**	
3.5	**Pin check for bending**			
3.6	Permissible bending stress	σ_A		[ksi]
3.7	Comparative stress	σ		[ksi]
3.8	Safety			
3.17	**Check of shaft for torsion**			
3.18	Permissible torsional stress	τ_A	16.0	[ksi]
3.19	Comparative stress	τ	7.2	[ksi]
3.20	Safety		2.21	

3.9	**Check of contact pressure : Pin - Hub**			
3.10	Permissible pressure	p_A	13.0	[ksi]
3.11	Comparative pressure	p	2.0	[ksi]
3.12	Safety		6.65	
3.13	**Check of contact pressure : Pin - Shaft**			
3.14	Permissible pressure	p_A	29.0	[ksi]
3.15	Comparative pressure	p	17.9	[ksi]
3.16	Safety		**1.62**	

4.0 ☐ Graphical output, CAD systems

Appendix E - Energy Generator DVP&R

Report Date	2/10/2014	Sponsor	Exploration Station				Component/Assembly		REPORTING ENGINEER:

TEST PLAN										TEST REPORT			
Item No	Specification	Test Description	Acceptance Criteria	Test Responsibility	Test Stage	SAMPLES		TIMING		TEST RESULTS			NOTES
						Quantity	Type	Start date	Finish date	Test Result	Quantity Pass	Quantity Fail	
1	Frame	Variable Load	>300lbs	All	DV	1				PASS	1	0	
2	Chain Assembly	Chain Breaks or Slips Off	PASS	All	DV	1				PASS	1	0	
3	Regulator	Regulator Breaks	<70VDC	All	DV	1				>70VDC	0	1	Reduce Gear Ratio
4	Regulator	Regulator Breaks	<70VDC	All	DV	1				PASS	1	0	
5	Cranks	Crank-Shaft Connection Breaks	>300lbs	All	DV	2				<115lbs	1	1	Redesign Required
6													
7													
8													
9													
10													
11													
12													
15													
16													
17													
18													
19													
20													
21													
22													
23													
24													
25													
26													
27													
28													
29													
30													

Appendix F – Gantt Chart

Task Name	Duration	Start	Finish	Predecessor
Design/Build Energy Generator	0 days	Tue 10/1/13	Tue 10/1/13	
Define Customer and Engineering Requirements (Sponsor Meeting #1)	1 day	Wed 10/9/13	Wed 10/9/13	1
Brainstorming	12 days	Thu 10/10/13	Fri 10/25/13	2
QFD	2 days	Mon 10/28/13	Tue 10/29/13	3
Project Proposal	2 days	Wed 10/30/13	Thu 10/31/13	4
Idea Generation	7 days	Fri 11/1/13	Mon 11/11/13	5
Idea Refinement (Sponsor Meeting #2)	1 day	Tue 11/12/13	Tue 11/12/13	6
Concept Generation	19 days	Wed 11/13/13	Mon 12/9/13	7
Conceptual Design Report	6 days	Tue 12/3/13	Tue 12/10/13	8
Concept Refinement (Sponsor Meeting #3)	1 day	Wed 12/11/13	Wed 12/11/13	9
Concept Design Analysis	23 days	Thu 12/12/13	Mon 1/13/14	10
Create BOM	23 days	Tue 1/7/14	Thu 2/6/14	11
Critical Design Review (Sponsor Meeting #4)	1 day	Tue 1/14/14	Tue 1/14/14	10,11
Detailed Design	19 days	Wed 1/15/14	Mon 2/10/14	13
Critical Design Report	6 days	Tue 2/11/14	Tue 2/18/14	14
Hazard Identification	1 day	Wed 2/19/14	Wed 2/19/14	15
Purchase Materials	21 days	Wed 2/19/14	Wed 3/19/14	15
Assembley	51 days	Thu 3/20/14	Thu 5/29/14	17,16
Failure Analysis	51 days	Thu 3/20/14	Thu 5/29/14	17,16
Project Hardware/Assembly Demo	1 day	Mon 4/28/14	Mon 4/28/14	
Senior Design Expo	1 day	Sat 5/31/14	Sat 5/31/14	18
Final Report	14 days	Tue 5/20/14	Fri 6/6/14	18

Appendix G: Maintenance

STEP-BY-STEP GUIDE TO TRUCK FRONT TOP REMOVAL

Steps:

1. Open left side door
2. Disconnect all wires from terminal block, as referenced in **Figures 24** & **25**
3. Pull disconnected wires leading to display out front hole

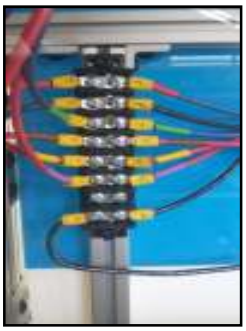

Figure 24

Figure 25

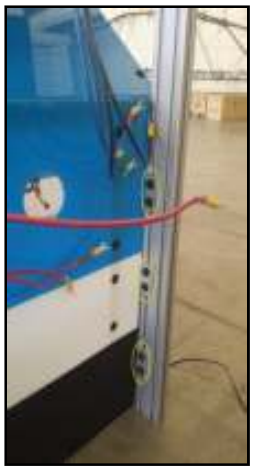

Figure 26

Figure 27

4. Loosen, but do not remove, 12 bolts holding base of display to truck front, as seen circled in yellow in **Figures 26** & **27**
5. With two people, slide display up out of securing plates, and set aside carefully **(CAUTION: Display is heavy).** **Figure 28** demonstrates removing the display while **Figure 29** shows the truck with the display removed.

Figure 28

Figure 29

6. At left side door when sitting in the exhibit: Loosen, but do not remove, all bolts circled in yellow in **Figures 30, 31, 32, 33,** & **34** (bolts at base)

Figure 30

Figure 31

Figure 32

Figure 33

Figure 34

9. Open right side door
10. At right side door: Loosen, but do not remove, all bolts circled in yellow in **Figures 35, 36, 37,** & **38** (bolts at base)

Figure 35

Figure 36

Figure 37

Figure 38

7. At truck silhouette: Loosen, but do not remove, all bolts circled in yellow in **Figures 39, 40,** & **41** (bolts at silhouette). **(CAUTION: loosen bolts holding acrylic panels only slightly as the bolts are short and can easily fall out of the nuts!)**

Figure 39

Figure 40

Figure 41

10. Slide up big silhouette panel with top extrusion, as demonstrated in **Figure 42.**
11. Slide out angle extrusion. **Figure 43** shows removed angle extrusion
12. With two people, lift up truck front top, and set aside carefully. **Figure 44** demonstrates lifting the top, **Figure 45** & **46** shows the truck with the front top removed.
13. To put back together, follow previous steps in reverse.

Figure 42

Figure 43

Figure 44

Figure 45

Figure 46

STEP-BY-STEP GUIDE TO TRUCK FRONT AND BACK SEPARATION

Steps:

1. Follow **Steps 1-5 and 9-11** of Truck Front Top Removal
2. At dashboard underside: Loosen, but do not remove, all bolts circled in red in **Figure 47** (underside of dashboard) **(CAUTION: loosen bolts holding acrylic panels only slightly as the bolts are short and can easily fall out of the nuts!)**

Figure 47

5. Slide Dashboard base extrusion right until the left vertical support is half exposed, as shown in **Figure 48**
6. At truck silhouette bottom: Loosen, but do not remove, all bolts circled in yellow in **Figure 49** (silhouette outside bottom bolts) **(CAUTION: loosen bolts holding acrylic panels only slightly as the bolts are short and can easily fall out of the nuts!)**

Figure 48

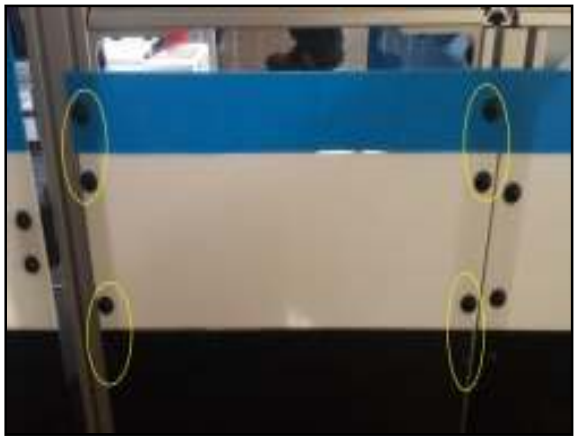

Figure 49

Figure 50

3. Slide acrylic silhouette bottom pieces carefully up and out.
4. At truck silhouette middle: Loosen, but do not remove, all bolts circled in **Figure 50** (silhouette middle extrusion support)

10. At floor board: Loosen and remove, all bolts. Leave all T-nuts in the extrusion to be matched up when putting back together. **Figure 51** shows the floor board.
11. Lift floor board out starting from pedal side. **Figure 52** shows the floor board removed

Figure 53

Figure 54

Figure 47

Figure 51

Figure 52

7. At floor connection: Loosen, but do not remove, all bolts circled in yellow in **Figures 53** & **54** (floor extrusion bolts)
8. With two people, pull each truck half apart. **Figure 55** shows the truck halves separated
9. To put back together, follow previous steps in reverse. Manually match T-nuts with floor board bolt holes in **Step 10.**