NOTE:
1. ALL UNTOLERANCED FEATURES ARE ⌓ .010 FROM THE MODEL.
2. TYPE III HARD ANODIZED, BLACK, .002 TOTAL, (.001 BUILDUP FROM SURFACE).
3. CHEM FILM IN .125 THRU HOLES AND ALL THREADS.
4. OD FINISH SIZE CAN BE MACHINED LATER AS AN ASSEMBLY.
5. LEAVE ALL EDGES SHARP ON THE FLEXABLE BEAM SECTION.

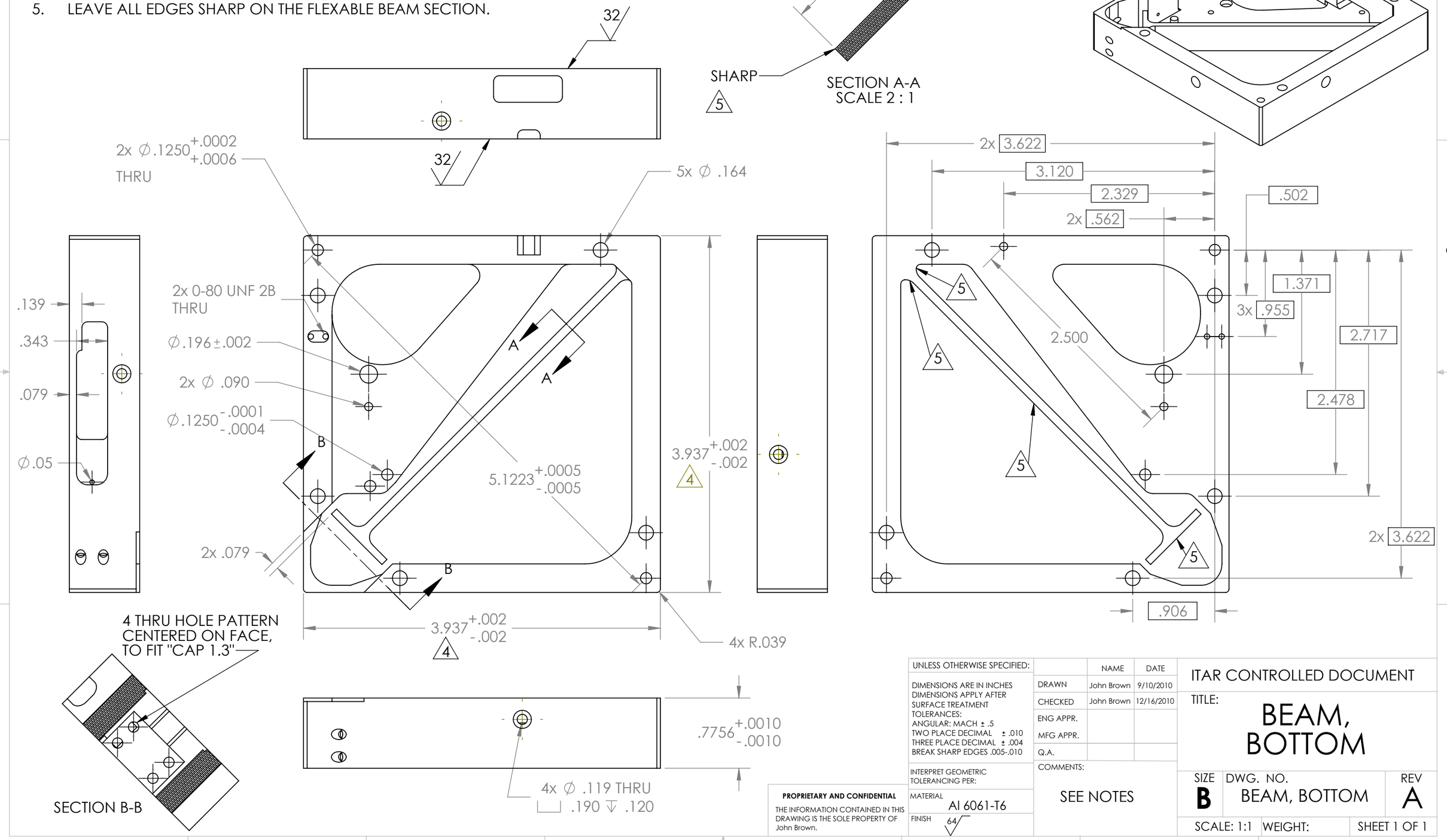

UNLESS OTHERWISE SPECIFIED:		NAME	DATE
DIMENSIONS ARE IN INCHES DIMENSIONS APPLY AFTER SURFACE TREATMENT TOLERANCES: ANGULAR: MACH ± .5 TWO PLACE DECIMAL ± .010 THREE PLACE DECIMAL ± .004 BREAK SHARP EDGES .005-.010	DRAWN	John Brown	9/10/2010
	CHECKED	John Brown	12/16/2010
	ENG APPR.		
	MFG APPR.		
	Q.A.		
INTERPRET GEOMETRIC TOLERANCING PER:	COMMENTS:		
MATERIAL: Al 6061-T6	SEE NOTES		
FINISH: 64			

PROPRIETARY AND CONFIDENTIAL

THE INFORMATION CONTAINED IN THIS DRAWING IS THE SOLE PROPERTY OF John Brown.

ITAR CONTROLLED DOCUMENT

TITLE: BEAM, BOTTOM

SIZE	DWG. NO.	REV
B	BEAM, BOTTOM	A

SCALE: 1:1 | WEIGHT: | SHEET 1 OF 1