INSTRUMENTATION AND EVALUATION OF DISTRICT 10 CALTRANS AUTOMATED WARNING SYSTEM (CAWS)

Final Project Report

Summary of Results and Recommendations

Prepared for the California Department of Transportation and California Office of Traffic Safety

by Loragen Corporation, San Luis Obispo, California

Project Manager: Andrew Lee, Caltrans Division of Research and Innovation

Evaluation Principal Investigator: Art MacCarley

OTS Grant RS0034, Caltrans Contract 51A0050

Document No. L-D10-FR-01

September 25, 2005

Table of Contents – Complete Report

Summary of Results and Recommendations Vol. 1

Documentation:

Analysis of Driver Response to CAWS Warning Messages Vol. 2

Technical and Operational Assessment Vol. 3

Evaluation of Traffic Safety Influence Based on Historical Collision Data Vol. 4

Technical Deliverables Vol. 5

Table of Contents

Summary of Results and Recommendations 1

1.1 Project Summary 1
1.2 Credits 3
1.3 Disclaimer 3
1.4 Project Personnel 3
1.5 Background 5
1.6 History of the CAWS 7
1.7 System Description 11
1.7.1 Meteorological Monitoring System (Weather Monitor). 11
1.7.2 Traffic Monitoring System (TMS). 12
1.7.3 Signview CMS Network and Control System. 13
1.8 Goals and Objectives of Study 18
1.8.1 Assessment of the influence of the CAWS on driver behavior 19
1.8.2 Technical and Operational Assessment 19
1.8.3 Assessment of long-term impact of CAWS on accidents 19
1.9 Methodology 20
1.9.1 Assessment of the Influence of the CAWS on Driver Behavior 20
1.9.2 Technical and Operational Assessment 25
1.9.3 Analysis of Historical Collision Data 25
1.10 Summary of Results 26
1.11 Interpretation and Recommendations 34
1.12 Problems 36
1.13 Implementation Schedule 37
1.14 Documentation 54
1.15 Cited References 54
1.16 Appendix 57
1.16.1 Bibliography – Additional Published Information on Similar Highway Fog Warning Systems 58
1.16.2 Verification of Completion of Contractual Tasks based on Contract Schedule A: Project Description (OTS-38b) 68

Tables

Table 1.9.3.1. CAWS activation delay for fog messages at CMS 1. 31

Table of Figures

Figure 1.7.2.1. Map of CAWS Study Area, from Caltrans Construction Plans. 13
Figure 1.7.3.1. Main components of CAWS as Deployed in District 10 Study Area. 14
Figure 1.7.3.2. Detail of “Qualimetrics Caltrans Meteorological System” (QCMS) Weather Stations Deployed in Caltrans District 10, from Qualimetrics Systems Data Sheets (). 16
Figure 1.7.3.3. CAWS system overview. From presentation by Joel Retanan, Floyd Workmon and Celso Izquierdo of Caltrans operations. 17
Figure 1.9.1.1. CAWS study area, showing location of evaluation monitoring sites at north entrance on Interstate 5. 21
Figure 1.9.1.2. Location of five CAWS evaluation monitoring sites at north entrance to CAWS area. Composite photograph created from satellite photographs obtained from terraserver.microsoft.com. 22
Figure 1.9.1.3. Evaluation System Installed in Proximity to CAWS CMS 1. 23
Figure 1.9.1.4. Potential collision speed (impact velocity) v.s. separation distance or visibility distance. 24
Figure 1.9.3.1. Mean speed as a function of visibility, all lanes at each site, day and night. 27
Figure 1.9.3.2. Traffic characteristics before and after CMS warning. 29

Glossary of Acronyms and Special Terms

ACMS	After the Changeable Message Sign
BCMS	Before the Changeable Message Sign
Caltrans	California Department of Transportation
CAWS	Caltrans Automated Warning System
CMS	Changeable Message Sign
D10	Caltrans District 10 (Stockton), the location of the CAWS project.
DRI	Caltrans Division of Innovation and Research
Extinction Coefficient	A measure of atmospheric attenuation. The raw measurement generated by the visibility sensors. Visibility distance is inversely proportional during daylight hours
TTC	Time To Collision (metric indicative of collision risk potential)
Mean	Arithmetic average of a set of variables, or estimate of expected value of a sample set
MPH	Miles per Hour
OTS	California Office of Traffic Safety (funding agency for this project)
PCS	Potential Collision Speed
RWIS	Remote Weather Information System (each CAWS weather station)
Standard Deviation	A statistic indicative of the spread of data about the mean value
Signview	Central control program of the CAWS system which activates CMS warning messages in response to visibility, traffic and wind alarms provided by the QCMS or TMS programs
TMC	Traffic Management Center (District 10)
TMS	Traffic Management System (CAWS Speed monitoring computer program)
QCMS	Qualimetrics Caltrans Meteorological System (or CAWS weather system)

Keywords

California Department of Transportation (Caltrans), Office of Traffic Safety (OTS), Caltrans Automated Warning System (CAWS), Loragen Corporation, ITS, fog, traffic safety, detection, reduced visibility, accident, collision, automated driver warning, driver information systems, Caltrans District 10, Signview, field operational test, Qualimetrics, All-Weather Systems, ATMS, ATMIS, automated highways, speed variance, Time-To-Collision (TTC), Potential Collision Speed (PCS), statistical modeling.

Summary of Results and Recommendations

1.1 Project Summary

There is significant interest by traffic management personnel in the use of automated warning systems to provide drivers with real-time information on hazardous conditions related to traffic, limited visibility or roadway obstructions. In this work, we evaluate a large-scale real-time driver warning system, the Caltrans Automated Warning System (CAWS), located on the southbound direction of Interstate 5 and westbound direction of State Route 120 as they approach the junction near the San Joaquin River in Stockton, California. The CAWS covers 15 miles in an area known for dense recurrent fog, particularly at peak commute hours. It entered service in November 1996. The system includes 36 traffic speed monitoring sites, nine remote meteorological stations, and nine changeable message signs (CMS) for warning drivers. It is controlled by three computers located in the Caltrans District 10 Transportation Management Center. This system is believed to be one of the most advanced of its kind in the world.

We assessed the response of drivers to CAWS warning messages by measurement of traffic parameters on an individual vehicle basis at locations before and after the first CMS of the CAWS on southbound I-5. Over a two-year period of study, the speed, length and time of detection were recorded for every vehicle at four detection sites: two upstream and two downstream of the CMS. Visibility sensors before and after the CMS quantified local visibility, and surveillance cameras monitored both the traffic conditions and the actual message displayed by the CMS. Approximately 30 million vehicles were logged at each site over the two-year study period. During each fog or traffic event in which the CMS was activated, we examined mean speed, speed variance and potential collision speed (PCS). PCS considers the following distance, the visibility distance and speed of each vehicle to predict the impact speed if it had to brake abruptly, such as to avoid involvement in a multi-car collision in fog.

The challenge in this analysis was to separate the natural tendency of drivers to slow down in fog, as well as any site geometry effects, from the incremental affect of the CMS message. There appeared to be a consistent average incremental speed reduction of 1.1 mph and an average increase in PCS of 8.0 mph attributable to the CAWS warning message. Speed variance as measured by the standard deviation of the speeds of proximate vehicles was insignificantly affected by visibility reductions or the CAWS warnings.

A microscopic analysis of each fog event revealed two effects which explain the increase in PCS with a decrease in mean speed: (1) A subset of drivers comply to some degree with the advisory speed message. They build more densely packed platoons behind them, with generally reduced gaps. (2) Since PCS is based on the minimum of the following distance or the visibility distance, if visibility gets worse, PCS increases unless there is a commensurate decrease in speed. The small average reduction in mean speed is actually comparable with results for similar systems. The CAWS results were not expected to be as great as, for

example, the 5-6 mph reduction reported for the Dutch DRIVE system's dynamic speed limits that were enforced. The CAWS only advises safe speeds for the conditions.

Despite warning messages, it is disturbing to note that during fog event events, drivers continue at mean speeds consistently above 60 mph even in visibilities below 100 ft. Mean speeds in visibility as poor as 700 feet do not vary from speeds under clear conditions, typically 69-71 mph over all lanes, and 74-76 mph in lane 1. In fog, PCS values between 45 and 60 mph were typical, whereas PCS values during moderate traffic averaged 20-30 mph. It would require a degree of driver compliance beyond that achieved by any warning system we are aware of to prevent multi-car chain collisions in dense fog. All that can be achieved is small mean speed reductions that hopefully improve the odds. This is not a weakness unique to the CAWS.

We observed a number unexpected responses of the CAWS system which lead us to discover a number of operational problems related to software or control algorithm design issues. The response time between the visibility or trigger event and the corresponding CMS warning message was particularly problematic, with an average delay of over 7 minutes for fog messages, and between 3 and 6 minutes for traffic warning messages. The size and complexity of the system created a substantial maintenance workload for the District. The system includes three computers, nine CMSs, 45 field controllers, 216 inductive loop detectors, and 72 precision weather instruments, communicating over 45 individual telecom circuits. Collectively these factors may have contributed to a reduction in driver confidence in the CAWS.

The results of several analyses of collision data were mixed but generally negative. Overall collision data showed that the CAWS was associated with increased rates of collision during the first five years after its activation, but a consistent improvement trend after 2001. Over the period 1997-2003 compared with the period 1992-1996, an average increase in travel-normalized collisions of 60% was observed in the study area, compared with 30% in the CAWS control direction and 25% and 62% of on two directions of comparison highways having somewhat higher daily traffic volumes (average 39%). For fatal and injury collisions an increase of 77% was observed in the study area, compared with 39%, 24%, and 55% (average 39%) on the control and comparison highways. Results for targeted accidents such as collision in fog, rear-end collisions, or secondary collisions ran generally negative. However, for a few targeted classes of collisions such as secondary collisions in fog, a positive effect may be evident. Controlling for the potential affects of construction, peak and cross-peak traffic, and changes in the driver population over time did not significantly alter these conclusions. Model-based analyses generated contradictory results. Initial models predicted a possible reduction of 15% in overall collisions, and 12% in fatal and injury collisions, but later models indicated that the CAWS could not be associated with a statistically significant influence on collisions in either a positive or negative sense. Regarding the single question, "Based on collision data of all types, did the CAWS appear to be associated with an improvement in traffic safety?" we and our expert advisory panel feel that the overall results are inconclusive. It would not be unreasonable to infer a net positive overall benefit attributable to the CAWS, but of unknown magnitude.

Considering the results of all evaluation tasks together, the evaluators are of the opinion that the CAWS does provide a positive safety benefit to a degree consistent with or slightly less than reasonable expectations as established by similar systems in the USA or Europe. With minor modifications, its potential may be greater than previously demonstrated. In addition, we feel that the system has demonstrated an intrinsic value in traffic management and driver support that may transcend its immediately measurable or inferred effects on traffic safety.

1.2 Credits

This project is a part of the California Traffic Safety Program and was made possible through the support of the California Office of Traffic Safety, and the National Highway Traffic Safety Administration. This project was administered by the California Department of Transportation, Division of Research and Innovation, a unit of the State of California Business, Transportation, and Housing Agency.

1.3 Disclaimer

The opinions, findings, and conclusions expressed in this publication are those of the authors and not necessarily those of the State of California Business Transportation and Housing Agency, the California Department of Transportation or the National Highway Traffic Safety Administration. This report does not constitute a standard, specification or regulation.

1.4 Project Personnel

This work was administered by the California Department of Transportation, Division of Research and Innovation, a unit of the State of California Business, Transportation, and Housing Agency. The Caltrans project monitor is Andrew Lee, whose guidance and support have been critical to the successful performance of the evaluation.

Except where noted, this report was written by the evaluation project principal investigator (PI), C. Arthur MacCarley, Professor of Engineering at the California Polytechnic State University, San Luis Obispo, and Principal Engineer for Loragen Corporation.

The design and deployment of the CAWS Evaluation data acquisition network and the operational analysis of the CAWS were performed by the technical staff of Loragen Corp., including the PI, Christopher Ackles, Tabber Watts, Vinu Somoyji, John Clanton, Alex DeSharnais and John Tucker. The analysis of driver response and the operational assessment of the system were performed by this same group, with significant advisory input from Ezra Hauer and Richard Van der Horst, members of the external panel of expert advisors.

To a greater extent than the PI, the statistical analysis of collision data was performed and interpreted by Ed Sullivan, Soonjung Kim, Melanie Benibides, James Daly, Kimberly Mastako, Bridget Barrett, Tracy Stiller, and

Justin Link, with significant advisory input from Dominique Lord, Ezra Hauer, and James Moore. Accident and roadway construction data was provided Janice Benton of the Caltrans TASAS Unit, Leah Stokes of Caltrans District 10, Kevin Chan of the Caltrans Division of Construction, and officer Montez of the California Highway Patrol (CHP) in Stockton.

The methods and results employed in all analyses of this evaluation were reviewed, and substantial input was provided by the members of our external panel of experts in traffic safety and safety assessment: Richard van der Horst of TNO Human Factors Research in the Netherlands, Ezra Hauer of the University of Toronto, Dominique Lord of the Univ. of Texas, James Moore of USC, and Fred Rooney of Caltrans HQ Operations (retired). Their expertise was invaluable in the formation of the conclusions for each evaluation task from an often diverse set of results. The major contributions of Dominique Lord, James Moore and Ezra Hauer to the second model-based analysis of collision data are recognized.

The District 10 project manager originally responsible for the operation of the CAWS was Branch Operations Chief Laurie Jurgens, who was succeeded in this responsibility in 2000 by Electrical Systems Chief Clint Gregory, who served as our primary contact for the duration of the evaluation. Both worked to enlist resources in the district to support this evaluation project. We have worked with a succession of technical support contacts in District 10 and each have contributed information used in this report to various degrees. Among these were Ken Robertson, Jim Eckelstone, Garry Smith, Dave McPeak, and Veronica Cipponeri (our contact for the majority of the evaluation). All of the CAWS system logs were provided to us by Ms. Cipponeri who was responsible for the day-to-day operation of the CAWS. Joe Silvey of Caltrans D10 and James Collins of SAIC provided valuable technical support for the CAWS communications network. Colin Bortner and Jasmine Noriega, student assistants in Caltrans District 10, supported our frequent information requests.

Joel Retanan and Celso Izquierdo of Caltrans Operations (now in Research and Innovation) were the authors of the Signview and TMS computer programs, under the direction of Floyd Workmon (retired) of Caltrans Operations. Mr. Retanan provided access to the source code for these programs and assisted us with technical questions about the design and intended operation of the system. He served as the technical expert behind the CAWS for the duration of the study, and his assistance was of special value. Floyd Workmon (retired) provided many of the historical details about the evolution of the system. Additional background and historical information was provided by Caltrans personnel Randy Iwasaki, Joe Palen, John VanBerkel, and Asif Haq, and Teri Argerbright of Farradyne Systems Inc.

Our sincere gratitude is extended to all those who contributed and assisted our work, without whose support this evaluation would not have been possible.

1.5 Background

According to the National Highway Transportation Safety Administration (NHTSA) Fatality Analysis Reporting System (FARS), visibility-impairing fog was present and presumed a factor in 418 of the 38,309 fatal crashes that occurred nationwide (USA) in 2002 (1). Although fog crashes account for a small percentage of all crashes, those crashes often involve multiple-vehicle pileups and massive losses, not revealed from the raw statistics. Fog is a transient phenomena, difficult to predict and variable in density, location, dissipation rates, and area. The presence of fog creates a condition of greatly enhanced risk on a highway, for which most drivers are unprepared and unable to compensate. Ultimately, driver errors precipitate collisions leading to chain reactions with sometimes catastrophic consequences.

The magnitude and severity of such events has motivated interest in active mechanisms intended to reduce the heightened risk during visibility reductions. The most sophisticated such mechanisms deployed to date are automated real-time driver warning systems, capable of alerting drivers in advance of hazardous conditions, and possibly recommending specific driver actions such as reduced speed. National Cooperative Highway Research Program Synthesis reports in 1976 (2), 1991 (3), 1996 (4) and 2003 (5), among many other works, have provided guidance for many contemporary detection and warning system designs, and appropriate evaluations metrics.

Exposure of drivers to a warning message ahead of fog conditions, especially in combination with a traffic stoppage, increases the time available for reaction, and provides drivers with improved information. While reduced mean speed and reduced speed variance are the usual objectives, the actual effects on driver behavior are not well understood, and may be situation-specific. There is evidence that warning and advisory messages help to reduce variability in driver behavior, but there remain legitimate concerns about differential driver compliance that has the potential to actually increase the non-uniformity of driver reactions. Overall safety-enhancement objectives generally consider net effects over time.

The Caltrans Automated Warning System (CAWS) is deployed on a fifteen mile-stretch of Interstate 5 and State Route 120, near Stockton, California. It is possibly one of the most sophisticated driver warning systems in the world. At the time of activation, the system was unique among U.S. systems in that it incorporated a hierarchical control strategy for fully-automated display of messages in response to a wide range of hazardous roadway conditions, including but not limited to fog. A network of nine changeable message signs (CMS) are capable of displaying a repertoire of seven possible automated messages in response to inputs from 36 traffic speed sensor sites and nine automated weather stations. These include warnings of traffic slow-downs or limited visibility ahead, and (starting January 2001) specific advisory speeds. The system first became fully operational in November 1996.

The CAWS system was first publicly described, prior to completion, in a 1996 NCHRP Synthesis "Reduced Visibility Due to Fog on the Highway" (4). In this document, it was stated that the system would be designed to perform the following functions:

- Detect the presence of fog in the vicinity of the I-5 crossing of the San Joaquin River (the Mossdale "Y").
- Detect the presence of slow-moving or stopped traffic in the southbound lanes of I-5 and westbound lanes of Route 120 within the project limits.
- Based on the detection of fog and slow-moving or stopped traffic, select one of a number of prescribed alternative messages to transmit to drivers through fixed CMSs.
- Provide a means through which other customized measures can be transmitted to drivers through the CMSs.
- Provide a location where the system status can be monitored in real time and where historical records of system operation will be maintained.

The system would work cooperatively with the Central Valley Traffic Operations Center in Fresno, to the south of the CAWS area. The system would be unique in the USA in the extent to which it is fully automated.

Historically, one of the earliest automated systems was deployed as part of the Drive II project, Roadway Safety Enhancement System, on the A16 near Breda in the Netherlands in 1992, and evaluated over a two year period 1992-94 (6, 7). The evaluation methods used for this system, especially the emphasis on driver response, were of particular influence in the present work. In Europe, in addition to the Dutch system, automated and semi-automated driver warning systems have been deployed in Finland (8,11), Germany (11), Australia (11), and England (9). Real-time variable speed limits have been implemented in Britain, Germany and the Netherlands for many years, and are reported to result in reduced speed variance and more uniform headways between vehicles (10). Visibility is usually an important factor in the dynamic speed limits set by these systems. A comprehensive review of systems worldwide that implement variable speed limits was presented at the 79th TRB meeting (11).

Concurrent with or after the activation of the CAWS, several manual and automated systems have been deployed in the US, including systems in Idaho (12), North Carolina (13), Oregon (14,15,16), Virginia (17), Georgia (18,19), Tennessee (20,21), Florida (22,22), Arizona (23), Utah (24,25), and previously at approximately the same location in California (26,27). Most have relied on manual actuation.

One system in the US worth particular mention is a system with similar capabilities deployed in 1994 along a 12-mile section of Interstate 75 in South Georgia by the Georgia Department of Transportation (GDOT) and Georgia Tech University (28). This system, referred to as the GDOT Fog Detection and Warning System, consists of a network of 19 visibility sensors and 5 loop-based speed detection traps. Warning messages are displayed on four incandescent CMSs. Messages can be either manually or automatically selected and

actuated. Dial-up access is provided to law enforcement officials. The system presently remains in operation, and plans for expansion are in progress.

The bibliography at the end of this report includes descriptions of all highway fog warning systems for which published information was available at the time of this report.

All known systems have indicated some provision for effectiveness assessment, although data available and evaluation methods have been highly variable. The referenced Florida (8) and California (10) studies in particular recognized the lack of quantitative results in evaluations of visibility-related driver warning systems. Successful evaluations and prior results will be discussed in later sections of this report.

1.6 History of the CAWS

The San Joaquin Valley lies in the interior of California, extending from Sacramento south to the El Tejon Pass, at the north perimeter of Los Angeles County. The valley is known for seasonal ground fog, occurring from approximately October through April. In arid areas of the valley, blowing dust is also a problem during high-wind conditions. Interstate Highway 5 and California Highway 99 are the major north-south traffic arteries that extend the length of this corridor. These and other smaller highways in this valley have historically been prone to multi-car accidents during reduced-visibility conditions due to fog or dust.

The cities of Stockton and Manteca are situated in a low-lying area of San Joaquin County, which is located at the north end of the valley. In this particular area, Highways 5 and 99 almost converge, connected by a seven-mile stretch of California Highway 120, which feeds into State Highway 205, a major artery into the San Franciso Bay area. Traffic converges abruptly and is often heavy, comprised of both local and interstate elements. Dense fog occurs regularly and with little warning, especially during morning and evening commuting hours. During fog conditions, driving can become extremely hazardous. This area has previously been used as a test bed for visibility-related traffic safety studies, such as Operation Fogbound29, a 1973 field test of highway visibility sensors.

In 1991, growth in the greater Stockton area created an urgent need to expand the capacity of Highway 120 from 2-lanes to 4-lanes in the Mossdale area, situated between highways 5 and 99. This project eventually became know as the Manteca Bypass Expansion, and evolved through the normal process of approvals and environmental impact assessments. Just prior to the letting of construction contracts, a resident of Manteca, Mike Barkley, threatened a lawsuit against the State of California citing the failure of the environmental impact study to adequately address the problem of fog-related traffic safety. Mr. Barkley was motivated by his near-involvement in two fatal multi-car accidents on this stretch of highway in 1989 and had become a crusader for some type of solution to this problem. The highway expansion project became the catalyst. Mr. Barkley found support for his concerns in the District 10 office of the California Department of Transportation (Caltrans), which had long been concerned about the problems in the area but lacked resources to implement solutions beyond

static warning signs, which had proven to be of little value to drivers. Similar catastrophic events nearby contributed to a sense of urgency. On February 7, 1991, just south of the area on Highway 99, a fog-related accident involved 75 vehicles and killed 4 people. Cooperation prevailed between Caltrans legal council Bruce Behrens and Mr. Barkley. According to Barkley (30) “We sat down and we worked through what the problems were and what the possible solutions were. I think Caltrans truly would like to do what it can to solve this problem of fog-related pile-ups”

The combination of environmental and traffic conditions made this location a unique candidate for a high-tech solution. In the assessment of John Van Berkel (31), the deputy district director for system operations, the limited distance, converging traffic pattern in the “Mossdale Y” junction of I-5 and SR120, and high incidence of dense ground fog made the area an ideal site for an active fog warning system.

The solution was fleshed out in discussions between Van Berkel and Cliff Rice, chief engineer for District 10 Traffic Operations. Among the primary requirements identified was driver confidence in the information provided by the system. It was known from prior studies in this area and in Riverside, California (32) that lack of driver trust could easily nullify any potential benefits. Another consideration was that fog in this area was highly localized. Visibility can change dramatically between locations separated by as little as 500 feet. These criteria dictated a network of closely spaced real-time sensors for both visibility and traffic conditions, as well as a display system that could be seen by drivers even under very limited visibility. The system would require automated decision-making capability for 24-hour autonomous operation, since the most egregious conditions usually occurred at night or in the early hours of the morning.

The result was an architecture incorporating three primary elements: a network of remote meteorological stations, a network of traffic speed monitoring stations, and the deployment of self-illuminated changeable message signs (CMSs), all at intervals yet-to-be determined along the highway. The system envisioned would have the capability to warn drivers in advance of potentially lethal combinations of impaired visibility and traffic congestion, and optionally recommend appropriate actions. The system would have direct links to the California Highway Patrol. A network of Closed-Circuit Television (CCTV) cameras would be deployed for incident verification. A Highway Advisory Radio (HAR) system was to be added eventually to supplement the visual driver warnings. Ultimately, the system would be the first fully automated multi-sensor multi-function driver warning system in the United States. The deployment time frame was very limited, precluding extensive development efforts.

Design requirements were written by Caltrans staff, and a request for proposals was issued. In mid-1991, a concept development and feasibility study contract was awarded to Parsons Brinckerhoff’s Farradyne Systems Incorporated (PBFSI) and Quade-Douglas (PBQD) divisions, with the intention of awarding the overall project to this team depending on the proposal and cost estimate resulting from this work. Cliff Rice served as the first Caltrans project manager. In mid-1992, when the resulting deployment cost estimate provided by PBFSI/QD was considered excessive, the project was undertaken internally by a joint engineering team from Caltrans

District 10 and Caltrans Operations Division in Sacramento. Planning, specifications and estimation was performed by this team. In early 1993, a go-ahead for partial funding from the Caltrans State Highway Operations Protection and Planning (SHOPP) directorate was given, for an estimated capital cost of $3 million. A first phase would be deployed, covering approximately only half of the intended study area – just the southbound I-5 and westbound SR-120 directions leading to the Mossdale Y. The Phase 1 deployment would consist of nine meteorological sensor sites and nine CMS's. The coverage area for traffic speed/count monitoring would be more extensive: 36 sites would be installed. The intention at the time was to assess the performance of this first phase prior to deploying a potentially larger second phase. At the date of this report, the second phase has not been deployed.

Randy Iwasaki, deputy director of operations in District 10 became the project manager. Systems engineering responsibilities were undertaken by Floyd Workmon of Caltrans Operations. Software design responsibilities for implementation of the decision-making capability, CMS control, traffic speed monitoring, and data communications would be the responsibility of Joel Retanan and Celso Izquierdo of Caltrans HQ Operations. Qualimetrics Inc. of Sacramento was selected to provide turnkey installations of nine remote meteorological sensor stations and a central display and communications workstation, which would be referred to as the Qualimetrics Caltrans Meteorological System (QCMS). Each "weather station" includes a dual-axis forward-scatter visibility sensor, an anemometer, wind direction indicator, barometer, thermometer, relative humidity (dew point) sensor, and precipitation gauge, and a telemetry system for encoding all instrument data and transmitting to a central facility for display and recording on a PC. The software for the traffic monitoring system (TMS) and CMS control system (a modification of the existing Caltrans "Signview" CMS control program) were developed by Caltrans Operations. COTS (Commercial of-the-shelf) hardware was utilized whenever possible to minimize cost and reduce deployment time. The Signview and TMS programs were hosted on regular IBM-type DOS PC's. Standard Caltrans specification 170 controllers were used for both the traffic speed detection sites and the CMS interfaces. Subcontractors were engaged to install loop detectors and CMSs. A map of the CAWS study area is shown in Figure 1.7.2.1.

The Phase 1 deployment was completed in October of 1996, under budget at a capital outlay cost of $2.5 million, not including Caltrans internal costs. The system was first activated in November 1996 and has been in continuous service since that time.

Lacking an official designation by Caltrans, and following the suggestion of Floyd Workmon of Caltrans Operations in 1998, the complete system was designated by the evaluators as the Caltrans (District 10) Automated Warning System, or for convenience, the "CAWS". The three interacting computer systems which implement the meteorological monitoring, traffic speed monitoring, decision-making and CMS display capabilities of the system are located in the Traffic Management Center (TMC), in the basement of Caltrans District 10 headquarters in Stockton.

In 1997, Cal Poly State University, San Luis Obispo was engaged through California PATH (U.C. Berkeley) to assist Caltrans in the design and setup of an appropriate evaluation program. A preliminary evaluation design report was completed and published by PATH in May,1999.

The winters of 1997 and 1998 were considered unusual due to the small number of occurrences of dense fog. This was generally attributed to “El Nino” weather patterns, which bought greater than normal rains to the area. There was an incident on Southbound I-5 at I-205 in January 1997 related to highway flooding. Warnings of congested traffic conditions occurred on a routine basis, although fog-related warnings were few and brief. In December 1997 a serious fog-related multi-car incident occurred in an area south of and outside the CAWS network on Highway 5, which may have lead to enhanced interest in studying the effectiveness of the CAWS.

On September 22, 2000, a grant was obtained from the California Office of Traffic Safety by Loragen Corporation of San Luis Obispo and administered through Caltrans Division of Research and Innovation to design and deploy a data acquisition network capable of accurately assessing the response of drivers to the CAWS system, and to use this system to conduct a comprehensive evaluation of the safety-enhancement effectiveness of the CAWS. A network of five field monitoring stations and a central server were designed and set up to examine detailed traffic characteristics in support of a driver response analysis as well as to provide monitoring functions for an operational analysis and accident statistical analysis. The development and implement process was arduous with both technical and institutional issues to overcome. General calamities further delayed the full operation of the evaluation system: In 2003 roadway construction destroyed the loop detectors at the north-most evaluation site, in 2002 a major accident that destroyed the power to the area for 7 months, and communications and loop detector problems in 2001 through 2003. Continuous reliable data was not available from this data acquisition network until summer of 2003, in time for the fog season of 2003-04. The complete fog seasons of 2003-04 and 2004-05 served as the core evaluation periods for this study. The CAWS evaluation system and real-time traffic and visibility data from the system were made accessible to the public via a dynamic web site in 2002 http://caws-evaluation.loragen.com. This web site also provided secure access by Caltrans and traffic engineering researchers to the complete database and on-line analysis tools.

A separate CAWS “weather server” was also designed and deployed at the request of Caltrans in the District 10 TMC to provide real-time monitoring of weather conditions in the CAWS area available to Caltrans personnel on their internal Intranet.

Driver response and operational issues were evaluated over the complete 2003-04 and 2004-05 fog seasons. A preliminary report to Caltrans on critical operational issues was submitted after the first fog season, and as a result, some improvements in the CAWS (Signview) software were made during the summer of 2003. Accident statistics were studied over the period 1992-1996 (before the CAWS) and 1997-2003 (after the CAWS), using the opposite direction of traffic flow on I-5 and SR-120 as a control area. Preliminary reports from this analysis were submitted at Caltrans’ request in 2001 and 2003. Over the course of the study, the evaluation team has

worked closely with District personnel with common goals of assuring an accurate evaluation as well and maintaining proper function of the CAWS.

The CAWS Evaluation Data Acquisition system was turned over to the responsibility of Caltrans District 10 in May 2005, and it remains in operations for continued support of the CAWS and district traffic management, as well as a pubic resource to traffic safety researchers.

This document reports the results of all components of the evaluation project, culminating in recommendations and lessons learned for the design and operation of similar automated warning systems. Over the course of the evaluation, much was also learned about the response of drivers to safety interventions in general, and the measurable characteristics of traffic by which relative safety may be assessed. This study has also provided a forum for exchange of ideas and methods with the evaluators of other driver warning systems in the USA and internationally, in particular, the Dutch “DRIVE” project in Breda, which was similar in scale and features. A better understanding has been gained of the relative safety value of not only the CAWS, but of dynamic driver warning methods and systems in general.

1.7 System Description

The primary function of the CAWS is to detect the presence of reduced visibility and/or congested traffic on the highway, and to warn drivers in advance of such conditions. The system also advises of high wind conditions, and supports the statewide Amber Alert system. The CAWS is comprised of three primary systems, described below:

1.7.1 Meteorological Monitoring System (Weather Monitor).

Manufactured and installed by Qualimetrics Inc. (now All Weather Systems, Inc.) of Sacramento, California. Nine remote weather information stations (RWIS) are deployed on the southbound directions of I-5 and SR-120, each including a dual axis atmospheric visibility sensor, an anemometer, wind vane, barometer, thermometer, relative humidity sensor, precipitation gauge, day/night illumination level sensor, and a telemetry system for encoding all instrument data and transmitting to a central facility for display, logging and generation of “alarm threshold triggers” used by the CAWS for the display of warning messages. Data is carried over a network of dedicated leased telephone-type lines to the Traffic Management Center (TMC) located in Caltrans District 10 Headquarters in central Stockton. Information is displayed via a proprietary program running under Windows 95 on a PC in the TMC. Data is retained on disk until disk capacity is exceeded, when it must be manually backed up and erased. The PC has an RS-232 link to the Signview (main CAWS) computer, described below. The system is isolated and not accessible by either an Internet or Caltrans Intranet network connection.

1.7.2 Traffic Monitoring System (TMS).

A total of 216 inductive loop detectors are installed in duplex (speed measurement) configurations at 36 sites, spaced at approximately 1/2-mile intervals on the southbound directions of I-5 and SR-120 in the Stockton-Manteca area. Some are located at or proximate to weather stations. Six sites are designated as communications hubs, to which all other sites are connected via twisted pair in a “star-type” network. All installations conform generally to Caltrans and US DOT FHWA specifications and practices for field control systems (33). Type 222 dual-channel inductive loop detector cards operating in pulse mode are used for vehicle speed measurements, calculated by algorithms running on Caltrans Type 170 controllers. Data from each of the six communications hub sites are brought into the District 10 TMC over dedicated and leased telephone lines using Caltrans Type 400 (Bell L202S) 1200 bps modems at each end. Communications is full-duplex and a polling cycle of 50 seconds is used to retrieve data from all sites. Communications is completely separate from the QCMS weather system network. Data are normally logged once every 15 minutes. Traffic count and speed data are displayed via the Caltrans-developed TMS (Traffic Monitoring System) program running under MS-DOS on an IBM-type Intel 386 PC located in the District 10 TMC. The program has display and processing capabilities for up to 36 sites. Data is retained on disk until disk capacity is exceeded, when it must be manually backed up and erased. The PC communicates with the CMS-control PC described below via an EIA232c cable, at 9600 bps.

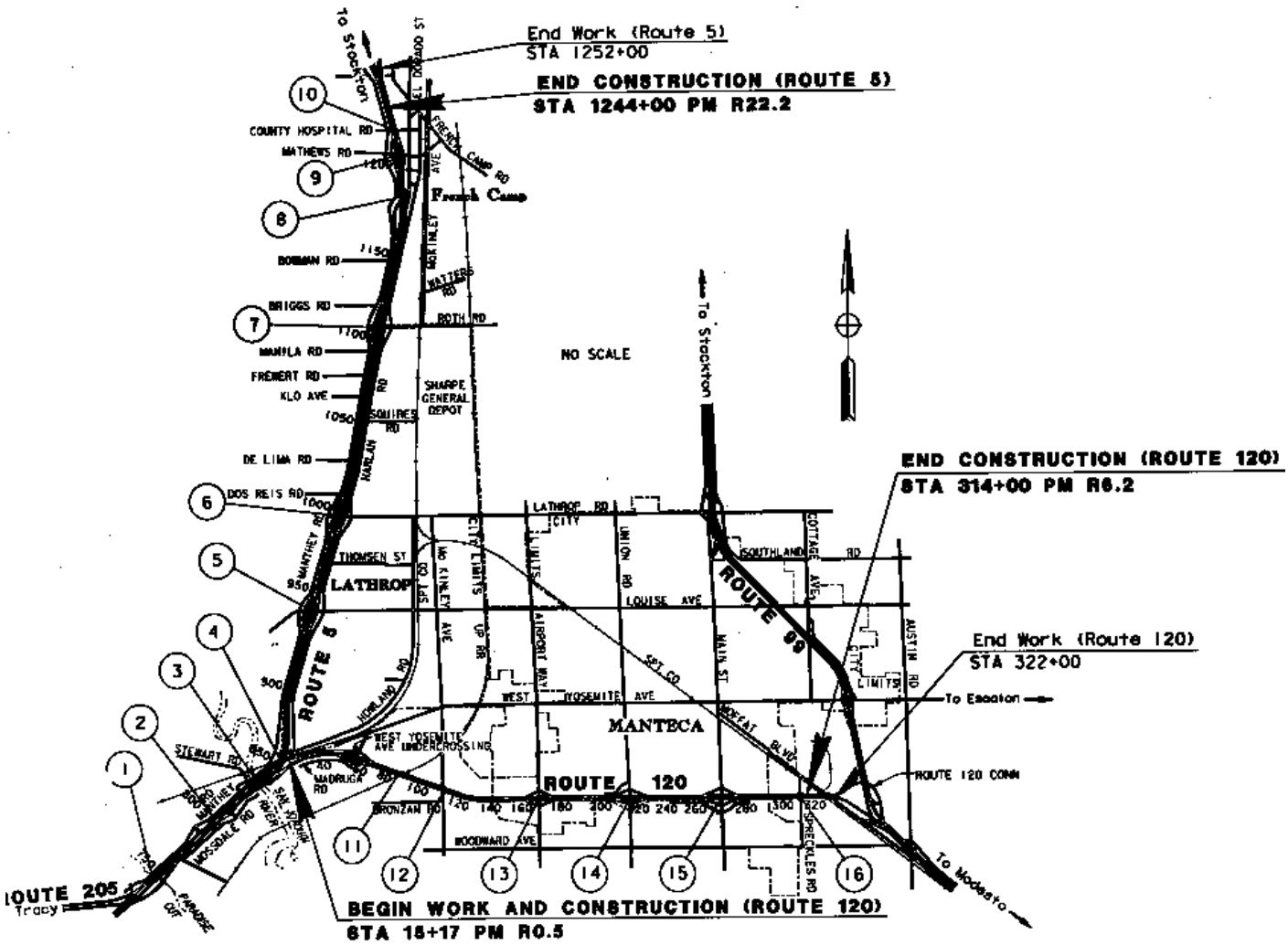

Figure 1.7.2.1. Map of CAWS Study Area, from Caltrans Construction Plans.

1.7.3 Signview CMS Network and Control System.

Caltrans Model 500 (34) incandescent changeable message signs (CMS) are installed at nine locations in the CAWS area. These were selected because self-illuminated displays have been reported to have the best readability under adverse weather conditions (35). All CMS sites use dedicated Caltrans Type 170 controllers for CMS control and communications. Communications is handled over leased phone lines using Caltrans Type 400 (Bell L202S) 1200 bps multi-drop modems, connecting field sites in star clusters to a single central monitoring PC in the District 10 TMC. The Caltrans “Signview” CMS control program was modified for automated activation of CMS messages is used to generate and send a fixed repertoire of driver warning and information messages to the nine CMSs. The CAWS version of this program will be referred to as “CAWS/Signview”, or just “Signview”. The following messages are automatically displayed:

- 2 traffic speed warnings: “Slow traffic ahead” and “stopped traffic ahead” based upon thresholds of below 35 mph, and below 11 mph respectively.

- The fog-related messages have been changed several times since 1996. Originally “FOGGY CONDITION AHEAD” or “DENSE FOG AHEAD”, changed in January 2003 to “DENSE FOG AHEAD, ADVISE 45 MPH”, or for visibility between 100 and 200 ft, “DENSE FOG AHEAD, ADVISE 30 MPH”. Changed in summer 2004 to “DENSE FOG AHEAD, ADVISE 45 MPH” for all visibility levels less than 500 ft.

- 1 wind speed warning: “HIGH WIND WARNING” is displayed when wind speed exceeds 25 mph.

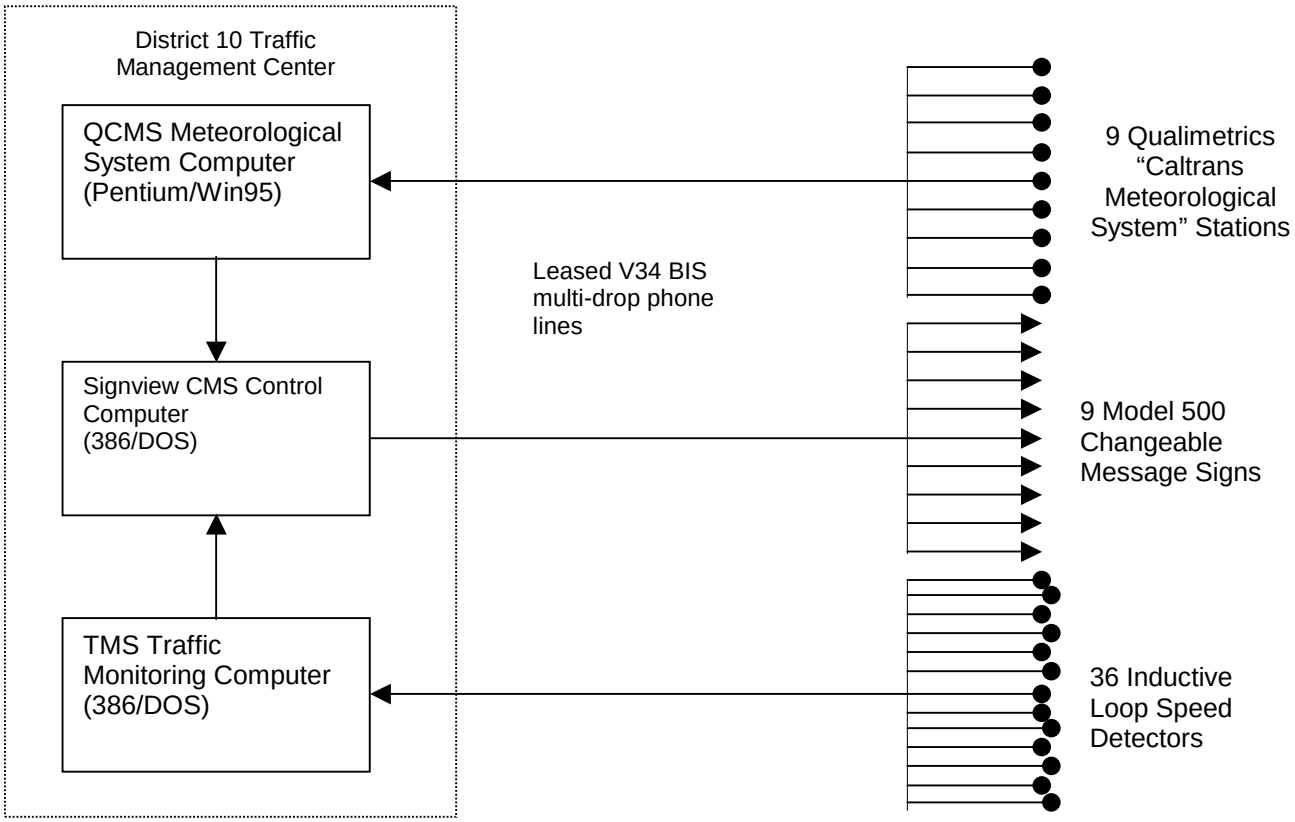

Figure 1.7.3.1. Main components of CAWS as Deployed in District 10 Study Area.

Priority-based preemption is implemented, with traffic speed-related warnings superceding visibility and wind-related warnings. Manually-entered warning messages can be displayed at any time by operator entry, but they are overridden by any automatically-generated messages. The Signview computer receives inputs via EIA232c serial links from the adjacent QCMS weather monitoring and TMS traffic monitoring PCs located next to it in the D10 TMC. The system is only accessible from the TMC. It cannot be remotely accessed either by network or modem. Figure 1.7.2.1 shows the three main computer subsystems of the CAWS, and their respective interactions with field sites and sensors.

The CAWS has capabilities beyond those currently in use for automated driver warning. Each of the nine QCMS weather stations, described in Figure 1.7.2.1, include a full complement of atmospheric monitoring

instrumentation. The central weather monitoring PC incorporates comprehensive data collection and interpretation capabilities. Combined with the network of 36 speed monitoring stations, additional reporting, alert generation, and data collection functions are possible. As a test bed for weather-related intelligent traffic management, this system appears to be one of the most sophisticated in the United States, and possibly the world.

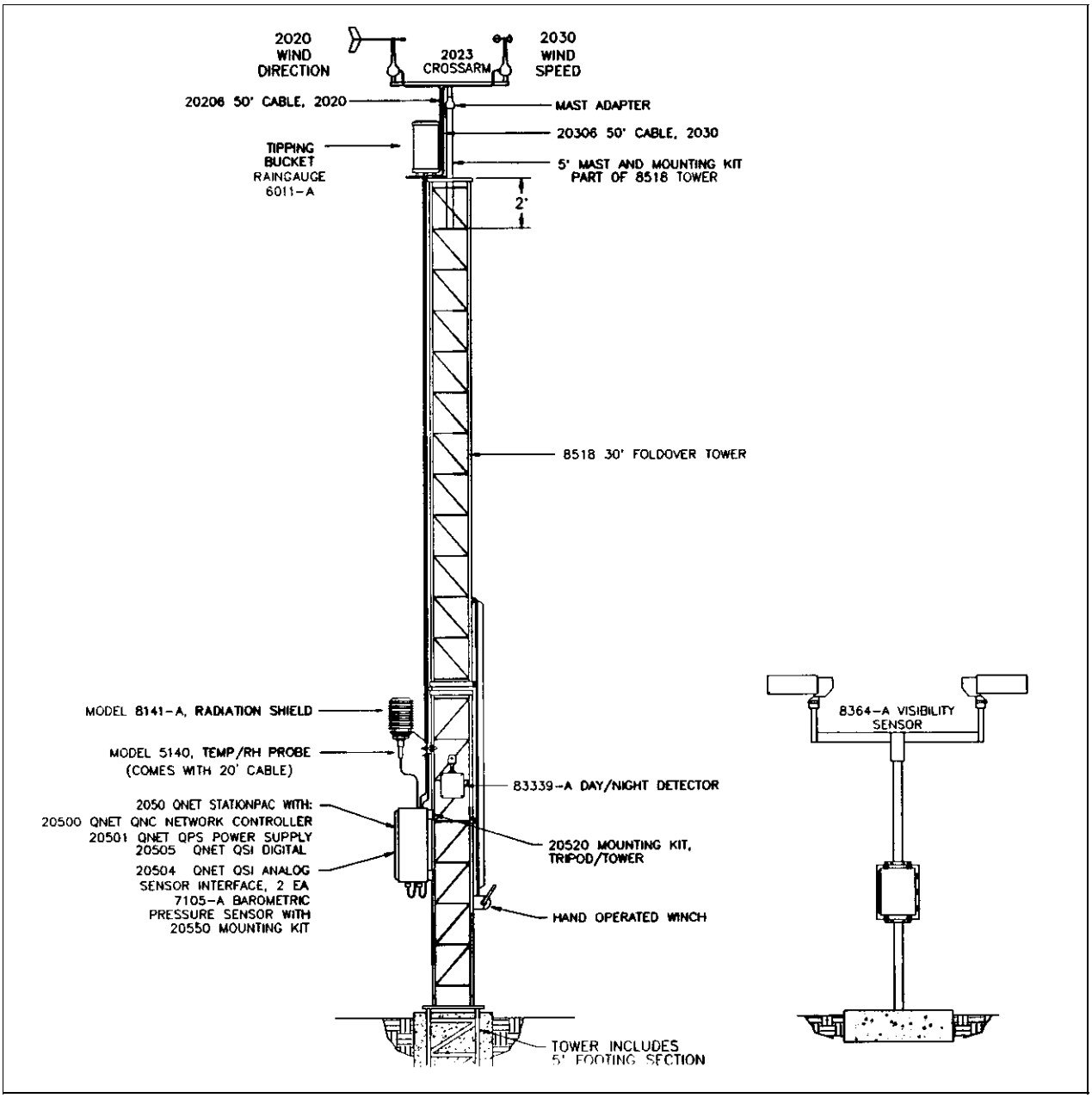

Figure 1.7.3.2. Detail of "Qualimetrics Caltrans Meteorological System" (QCMS) Weather Stations Deployed in Caltrans District 10, from Qualimetrics Systems Data Sheets (36**).**

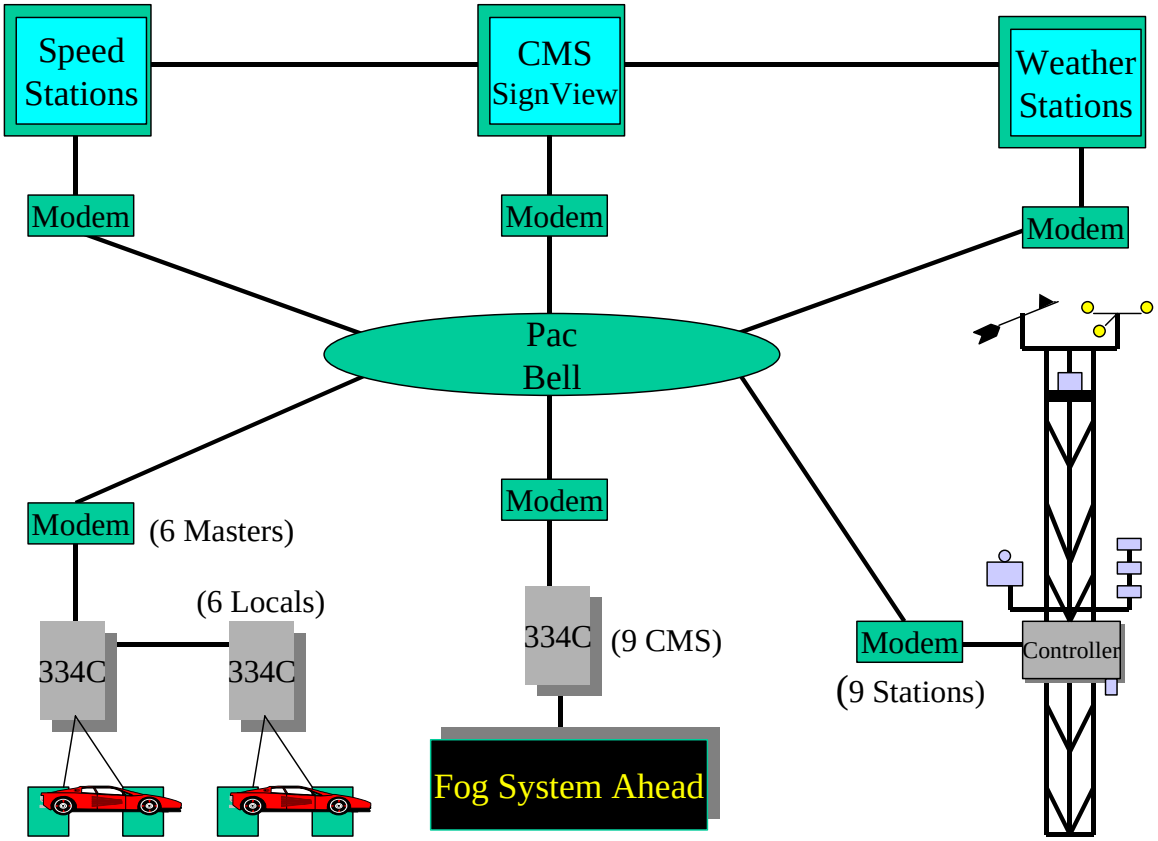

Figure 1.7.3.3. CAWS system overview. From presentation by Joel Retanan, Floyd Workmon and Celso Izquierdo of Caltrans operations.

1.8 Goals and Objectives of Study

The objectives of our evaluation focused on the effectiveness of the CAWS in improving safety and reducing accident risk to drivers resulting from limited visibility and congested traffic conditions. "Safety" is a nebulously defined term, which means different things to different people. To drivers, it is more likely to imply "security", while for transportation professional, it may be more formally interpreted in terms of accident rates (37), while in a fundamental sense it connotes a combination of individual accident risk and potential accident severity, which in turn manifest in the form of accident rates and loss factors accumulated over time. We attempt to evaluate system effectiveness at different levels reflecting these multiple views of safety. The evaluation attempted to conform to FHWA guidelines, as articulated by Mitre in 1994 (38).

Prior work in the area of traffic safety evaluation is extensive, and can only be selectively recognized here. In the 1981, the European Organisation for Economic Co-operation and Development (OECD) published "Methods for Evaluating Road Safety Measures," which went at length into measures of relative highway safety and risk. They define the "risk of a road" user as "the number of accidents or casualties per exposure," and emphasized that "exposure ought to describe directly or indirectly situation in traffic which correspond to accident situations" (39). NCHRP Synthesis 295 (40) advised on acceptable statistical methods in highway safety analysis. An excellent paper by Hauer addressed the limitations of statistical analysis of accident data (41). We follow the recommendations of these documents in Section 4 of this report, an analysis of historical and recent collision data.

In 1997, the Center for Urban Transportation Research at the University of South Florida performed a needs analysis for Tampa Bay and reviewed the state-of- practice in fog detection and motorist warning systems (42). They developed a four-step process for evaluating fog-detection technologies, which was published by Turner and Pietzyk in the February 2000 Institute of Transportation Engineers (ITE) Journal (43).

We first assess the ability of the system to influence the behavior of drivers, and attempt to answer the question: do drivers respond to CAWS warning messages as intended by the system's designers? We then examine the actual operation and mechanics of the system operation, assessing whether the system performs as expected and if the traffic control actions taken by the system are safety-enhancing. At the highest level, we perform a statistical analysis of accident data gathered before and after the deployment of the CAWS.

The evaluation was divided into three areas of study encompassing the contractual tasks and reflecting increasing levels assessment as articulated above. These are summarized below. The complete reports from each area of study are the contents of Volume 2, 3 and 4 of this overall document.

Throughout this report we will use the words "accident", "collision", and "crash" as synonymous, consistent with common practice in traffic safety literature.

1.8.1 Assessment of the influence of the CAWS on driver behavior

We assessed the ability of the system to influence driver behavior, as intended by the system designers. A network of sensors and data acquisition systems was deployed to examine the detailed characteristics of the traffic flow in the road segments immediately before and after drivers view a message on the first CMS of the CAWS. During events in which the CMS was activated, we analyze the distributions of vehicles speeds and separations and infer from this the relative safety of the traffic, geographically before and after the CMS, and in the time periods prior to and following the activation of the CMS. We seek to differentiate between normal changes in driver behavior as a reaction to the fog itself, and driver behavior changes in reaction to the CMS message. The analysis of driver response is the subject of Volume 2 of this report.

1.8.2 Technical and Operational Assessment

Two original contractual tasks were consolidated due to overlap and the natural synergy between the two. These are treated in a single volume 'Technical and Operational Assessment':

Technical Assessment - Examination of engineering design and operational documentation, and inspection of facilities, to provide a sense of the soundness of the design and implementation, and effectiveness of the integration of the system and subsystem components.

Operational Assessment - Assess the operation of the system directly by observing the actions taken by the system and their direct effects on traffic. Investigate technical reasons for any anomalies observed. We accomplish this by study of log files generated by each of the CAWS systems, as well as data generated by the evaluation data acquisition network. We examine a series of complete events during which the CAWS responded to traffic or weather conditions, and attempt to derive from these the actual control strategy of the system from examination of the Signview and TMS program source code (since no formal documentation of the control strategy had been created). We report attributes and deficiencies of the system as actually deployed.

1.8.3 Assessment of long-term impact of CAWS on accidents

By examination of archived accident records over several years prior to and several years after the activation of the system, we attempt to ascertain if the system is having a positive impact as reveled by accident statistics and fitted models. The before-CAWS years consisted of 1991 though October 1996. The after-CAWS years consisted of 1997-2003, the most recent full year for which accident data was available from the Traffic Accident Surveillance and Analysis System (TASAS) database. The two-month period November-December 1996 was not considered since it was the startup transition period for the system. The primary control area used in the study was the opposite direction of traffic flow on I-5 and SR-120, although a wider range of control areas including the SR-120/I99 junction area was added for comparison in some of the analyses including the multivariate modeling exercise. The statistical analysis of accident data is the subject of 'Evaluation of Traffic Safety Influence Based on Historical Collision Data', Volume 4 of this report.

Volume 5 of this report describes the operation and technical details of the CAWS Evaluation Data Acquisition System.

1.9 Methodology

Detailed descriptions of the methodologies associated with each method of evaluation are described in the corresponding analysis section. A summary is provided below.

1.9.1 Assessment of the Influence of the CAWS on Driver Behavior

We non-intrusively monitored traffic before and after drivers were exposed to the first CMS encountered upon entering the CAWS area on I-5. Two monitoring stations were located on the roadway before drivers encountered the first CMS. These stations are located 0.8 and 0.7 miles respectively from a local high point in the roadway (the French Camp Road Overcrossing) that blocks the view of the CMS from approaching drivers. The CMS is located 0.5 miles after this high point and is only visible in this interval. Two monitoring stations were located immediately after drivers have encountered the CMS, the first approximately 0.5 mile after the CMS and the second approximately 0.6 mile after the first but well before the sight distance to the next CMS of the CAWS system. The locations of these evaluation monitoring sites are shown in Figure 1.9.1.1 that also shows the locations of all deployed elements in the study area. Figure 1.9.1.2 is a composite aerial photograph of the locations of the evaluation monitoring stations.

All stations collected individual records of the time of arrival, speed and length of every vehicle in each of the three lanes at each site. Duplex inductive loop detectors were used in each lane to detect the time of arrival (to 0.01 second) and speed (to 0.1 mph) of each vehicle. Forward dispersion visibility sensors monitored local visibility at each of the innermost before and after sites. Video cameras were deployed before, at, and after the CMS for visual verification of traffic and visibility conditions. The message displayed by the CMS was monitored by direct interception of communications, and verified by a video camera. Data were retained locally until transmitted and verified over wireless connections to a central server. The server also hosted the CAWS evaluation web site http://caws-evaluation.loragen.com which provided public access to real-time data and the complete database. Figure 1.9.1.3 is a diagram showing the details of the components that constitute the evaluation system.

The CMS is actuated solely by the Mathews Road Weather Station (WS1), which is the same as our first After-CMS monitoring site. During the first complete fog season (Nov. 2003- Apr 2004), the CMS displayed two pre-preprogrammed messages: “DENSE FOG AHEAD, ADVISE 45 MPH” when fog-visibility was between 200 and 500 ft., and “DENSE FOG AHEAD, ADVISE 30 MPH” when fog-visibility was between 100 and 200 ft. When fog-visibility dropped below 100 ft., no message was displayed. During the second complete fog season (Nov. 2004- Apr 2005), the CAWS displayed a single warning message for all fog visibilities less than 500 ft.: “DENSE FOG AHEAD, ADVISE 45 MPH”. Only fog-related visibility is recognized. No message is displayed if relative humidity is less than 75% regardless of the visibility reading.

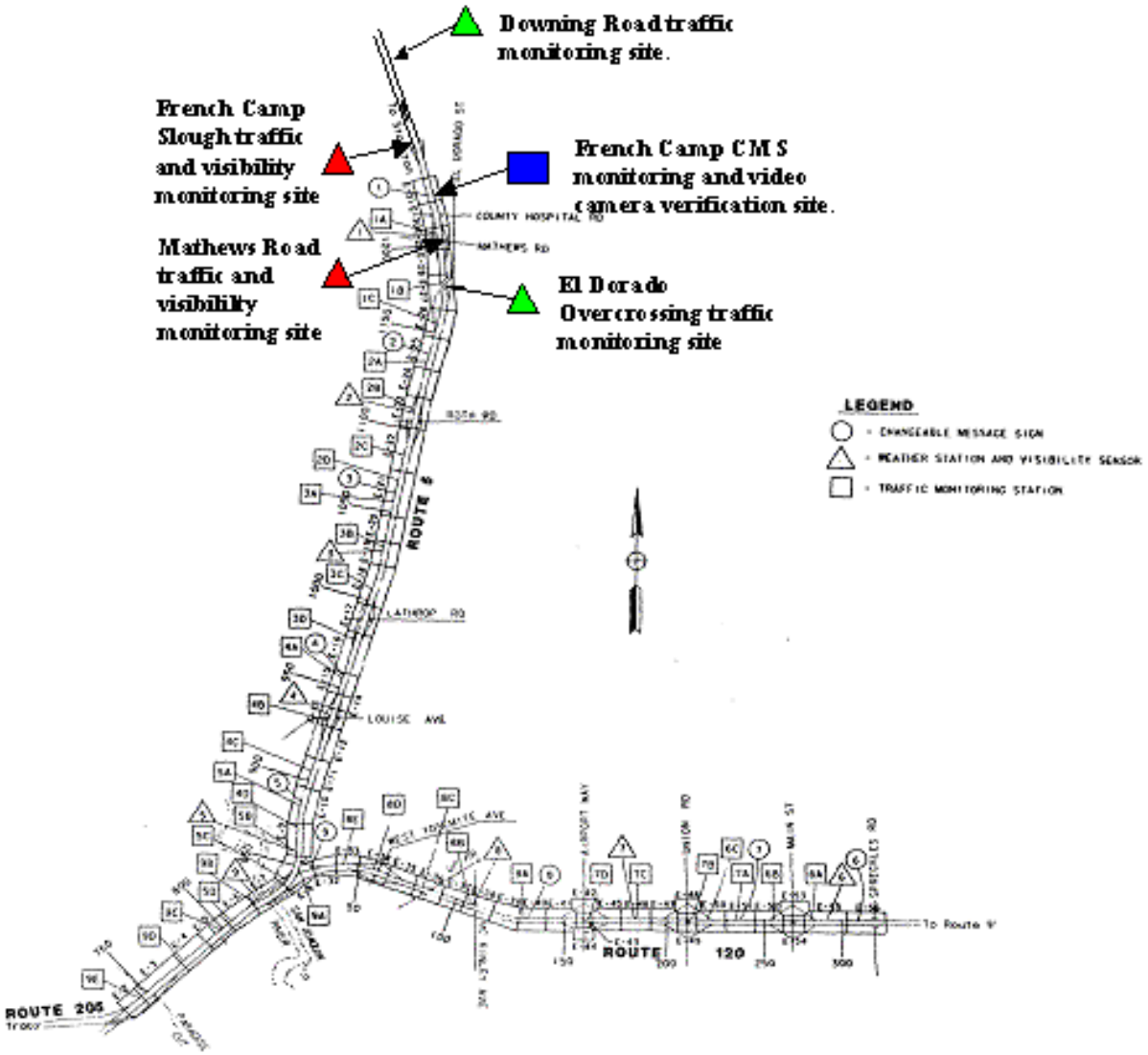

Figure 1.9.1.1. CAWS study area, showing location of evaluation monitoring sites at north entrance on Interstate 5.

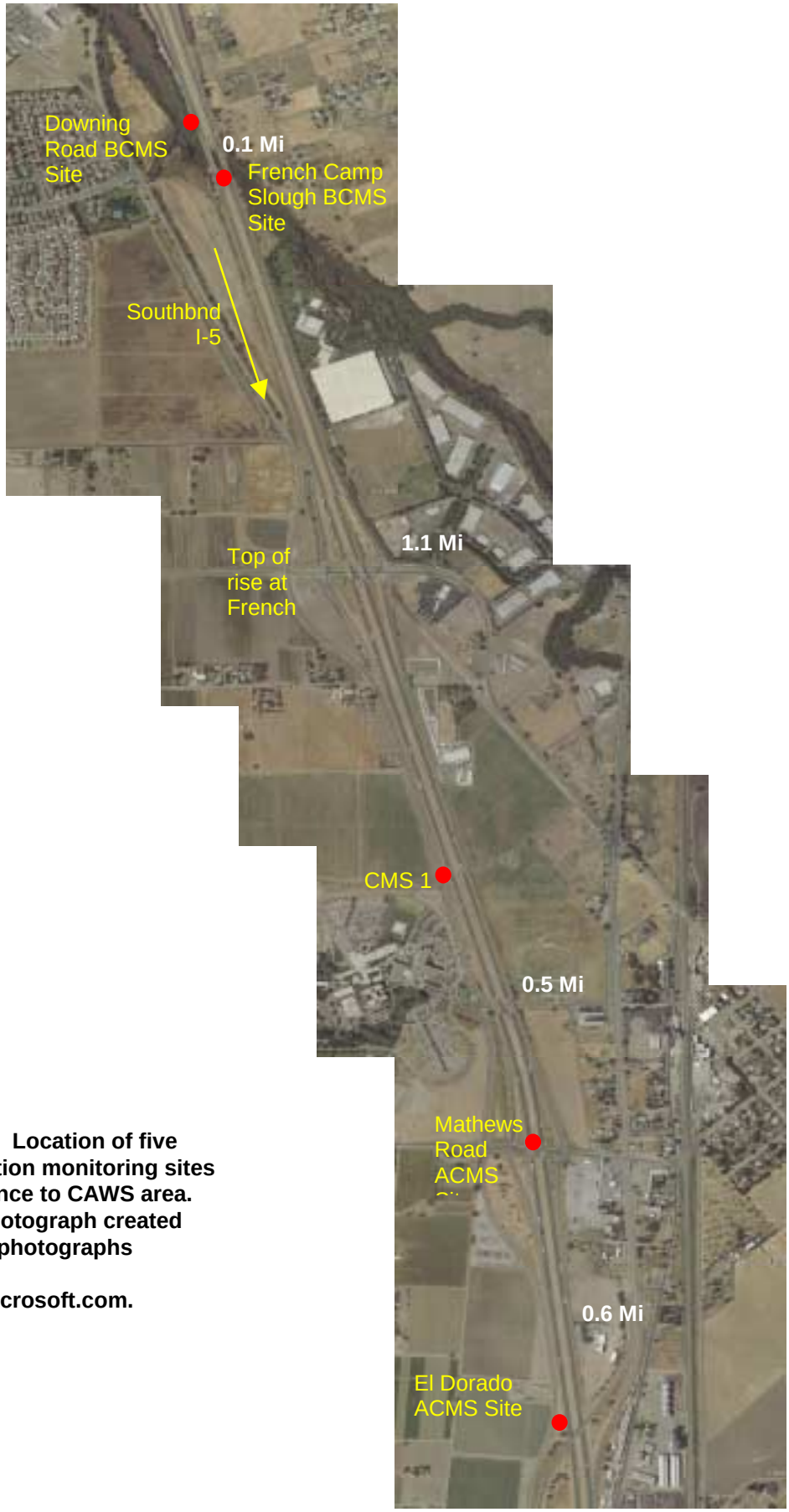

Figure 1.9.1.2. Location of five CAWS evaluation monitoring sites at north entrance to CAWS area. Composite photograph created from satellite photographs obtained from terraserver.microsoft.com.

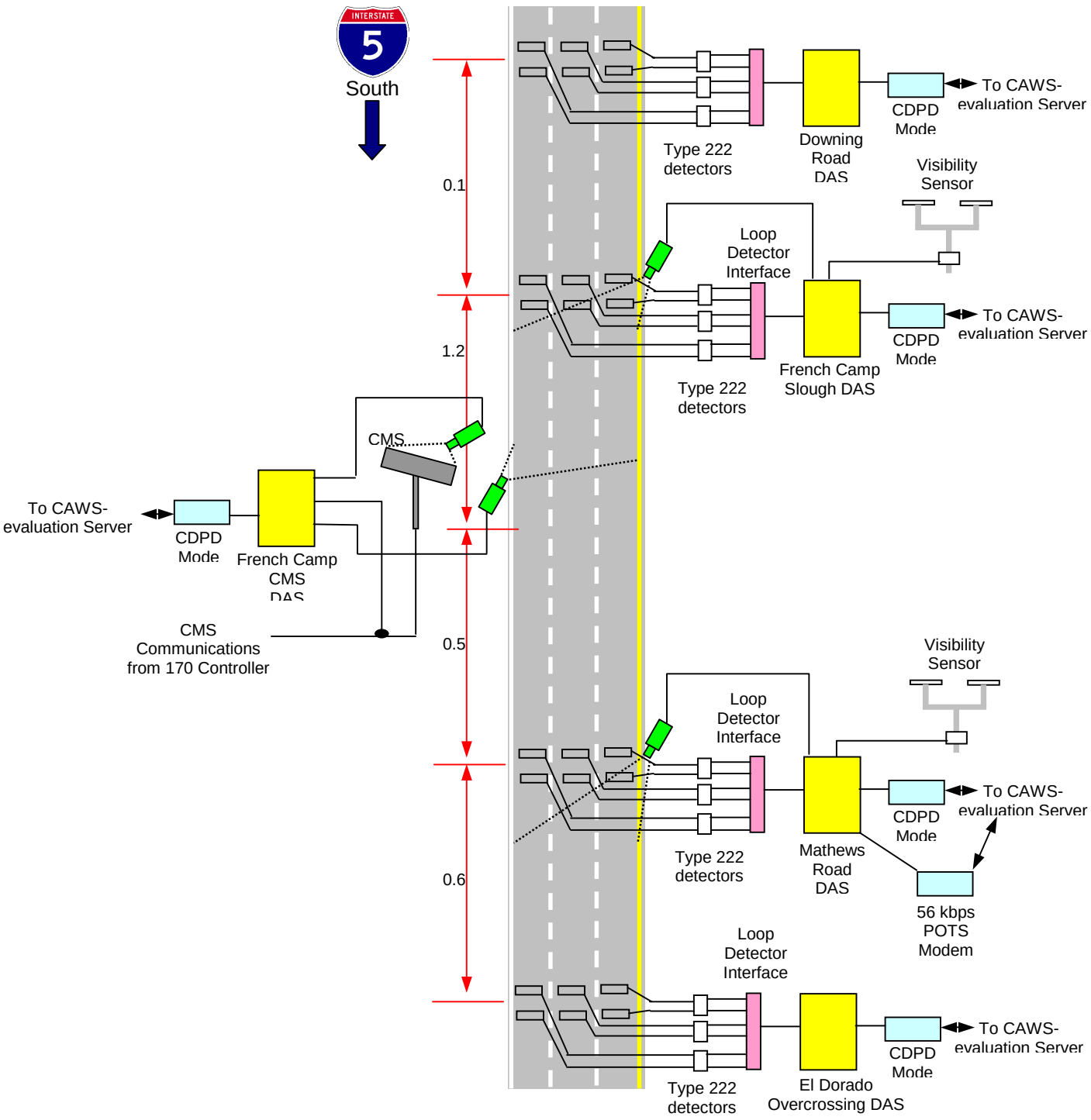

Figure 1.9.1.3. Evaluation System Installed in Proximity to CAWS CMS 1.

From the raw data, we calculated mean speed, speed variance (measured as sample standard deviation), and potential collision speed* for all vehicles detected within a 45-second moving window, incremented every 15 seconds. This approach facilitated nearly instantaneous measurements of each metric based on a small set of vehicles proximate in both time and position on the roadway. When restricted to such a short period, speed variance differs from variance measured over an entire event in that it considers only interactions between vehicles whose movements can potentially affect each other. The narrow time window also permits the observation of rapid transients, for example, immediately following the activation of a CMS message. But because of the small number of vehicles accumulated, these measurements can be prone to sample noise.

*Potential collision speed (PCS) may be interpreted as the predicted impact speed if the vehicle encounters an obstruction on the highway (as in a multi-car collision in fog). It is a nonlinear function of the initial speed and separation of each vehicle pair, the local visibility distance, and the driver reaction distance and braking distance at that speed. This metric was used as a means to factor in both the visibility sight distance and the following distance between successive vehicles at a given speed. It is predicated on the possibility of rear-end collision between vehicles in fog, and used as a progressive indication of relative or comparative danger for each vehicle in the event of a traffic disturbance. Its range extends from 0 mph, which means the vehicle could safely brake to a stop, to as high as vehicle free (initial) speed, this maximum value equivalent to the vehicle impacting the obstruction before even starting to brake. Or equivalently, it could not avoid collision with a vehicle in front of it even if that vehicle braked normally to a stop. Such a metric was appropriate in this study since 68.8% of collisions that occurred in fog in the study area from January 1997 to December 2003 were classified by the California Highway Patrol as “rear end” or “hit object” collisions (44).

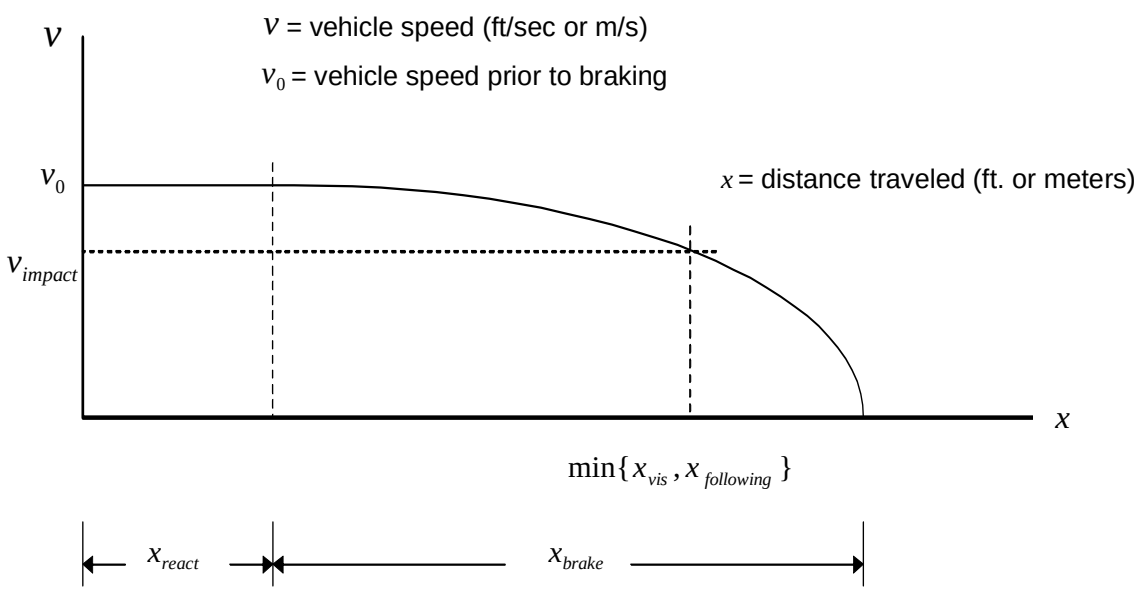

Figure 1.9.1.4. Potential collision speed (impact velocity) v.s. separation distance or visibility distance.

This and several related metrics appropriate for this study are discussed and derived in Section 2 of this report. The nonlinear relationship between speed, separation distance and visibility distance is plotted in Figure 1.9.1.4. In this figure, the curve is parametric with the initial vehicle speed. A separate number, in mph, is generated for each vehicle.

1.9.2 Technical and Operational Assessment

Initially we examined a sample of ten of the 36 traffic monitoring sites and remote weather stations that comprise the CAWS field sensors. The objective of this task was primarily to verify and document the system under test. Components included in this assessment were the Qualimetrics forward scatter visibility sensor, Q-Net Data Acquisition System, day/night detector, anemometer, wind direction sensor, hygrometer, rain gauge, barometer, power supply, relay/telemetry system, network controller, and central processor hardware.

The contractual task of the technical and operational assessment was to examine the implementation of the system, and determine if the system performed according to the original design expectations and operators' assumptions. We documented but did individually evaluate each of the key elements of the CAWS. We then observed the response of the automated system to a range of conditions that triggered, or should have triggered, a warning message on one or more of the nine changeable message signs. The responses either confirmed the basic function of the system as designed, or revealed unexpected behaviors that required deeper investigation. When necessary to explain these unexpected behaviors, we identified the actual control strategy by detailed examination of the CAWS/Signview or TMS computer logs and source code, in addition to data available from our evaluation data acquisition network. We dug as deep as necessary to get to the bottom of any unexplained system behaviors and their potential effects on the core driver warning functions of the system. We examined the operational characteristics of the CAWS via a number of case histories indicative of the range of possible responses of the system to speed-related and visibility-related trigger events. All data were obtained from the Signview, TMS, or QCMS log files, or when applicable, the CAWS Evaluation System database.

1.9.3 Analysis of Historical Collision Data

We examined historical accident data both overall and in a large number of subclasses, including accidents in fog, inclement weather, in the absence of construction, during peak and off-peak periods, cross-peak comparisons, primary and secondary accidents, and the proportions of accidents by CHP Type class such as rear-end, side-swipe, etc.

We attempted to control for external effects in a large number of ways. These included normalization of accident frequencies to various metrics of exposure, including travel volume (MVM), annual number of fog or inclement weather days, and each type or class of collision relative to all collisions, or other types of classes of collisions. We considered accident severity indicated by totals of fatal and injury accidents, property damage only accidents, and the number of vehicle involved in each reported accident.

We examined the locations of collisions, including the specific location of fatal accidents and accidents attributable to fog. Subsection sizes ranged from the three primary subsections of the CAWS (I-5 north of SR-120, I-5 south of SR-120, and SR-120 itself) to 0.25 mile segments intended to show in greater detail the locations of possible problem areas.

We especially considered the possible influence of roadway construction by repeating several prior analyses with these accidents removed from the data set.

In all analyses we compared the area influenced by the CAWS (the CAWS study direction) with a primary control area consisting of the opposite directions of the same highways, as well as two external highways used as supplemental control areas for some analyses. This helped to control for effect such as the change in the national speed limit or changes in driver attitudes that affected all areas at the same time.

We also fitted accident data acquired from both the CAWS and the supplemental control areas to various configurations of a multivariate model. By computer optimization of the model parameters for best fit, we inferred the possible influence of the CAWS on collision frequencies in segments of the CAWS study direction compared with segments of the other areas without the CAWS.

By this comprehensive process, we have attempted to not only infer the effectiveness of the CAWS in an overall sense, but to identify possible problem areas and corroborate the findings with driver behavior and operational assessment results from the other sections of this report, seeking to match statistical observations with possible causal chains.

This analysis was restricted to historic and recent numeric accident data obtained from TASAS and accident record reports maintained in the Caltrans District 10 office. We did not perform a detailed analysis of the text of accident reports, which might provide increased but more subjective insight into the role of CAWS in individual accidents. We did not conduct driver surveys that may have (with a high noise margin) revealed personal opinions or experiences of drivers about the effectiveness of the CAWS.

1.10 Summary of Results

A summary of the results and findings from the individual analyses contained in Volumes 2 through 4 are presented below.

Using the advanced instrumentation we designed and deployed at the north entrance to the CAWS on I-5, we studied the response of drivers to the warning message displayed by the CAWS. Over a two-year period of evaluation encompassing two complete fog seasons, a record of every vehicle on southbound I-5 was acquired at two sites before and two after the first changeable message sign encountered by drivers entering the CAWS area on I-5. Since this is the first CMS drivers would be exposed to in the CAWS, it was expected that their reaction to this CMS would be the most significant. We compared traffic observations before and after the

CMS, and during the time periods before, after and during the CMS display. We examined every event which activated the CMS for fog, traffic or wind.

Over all periods in which a CMS message was displayed, there is evidence that a message may enhance the existing tendency of drivers to reduce mean speed and increase Potential Collision Speed (PCS) as visibility decreases. This effect is small, however. The speed response of drivers is summarized in one of our many views of the data, a plot of mean speeds at each site as a function of visibility in Figure 1.9.3.1. The 'after' sites, represented by the upper two (blue and green) traces, benefit from the CMS warning message, while the 'before' sites, represented by the lower two (red and yellow) traces, do not.

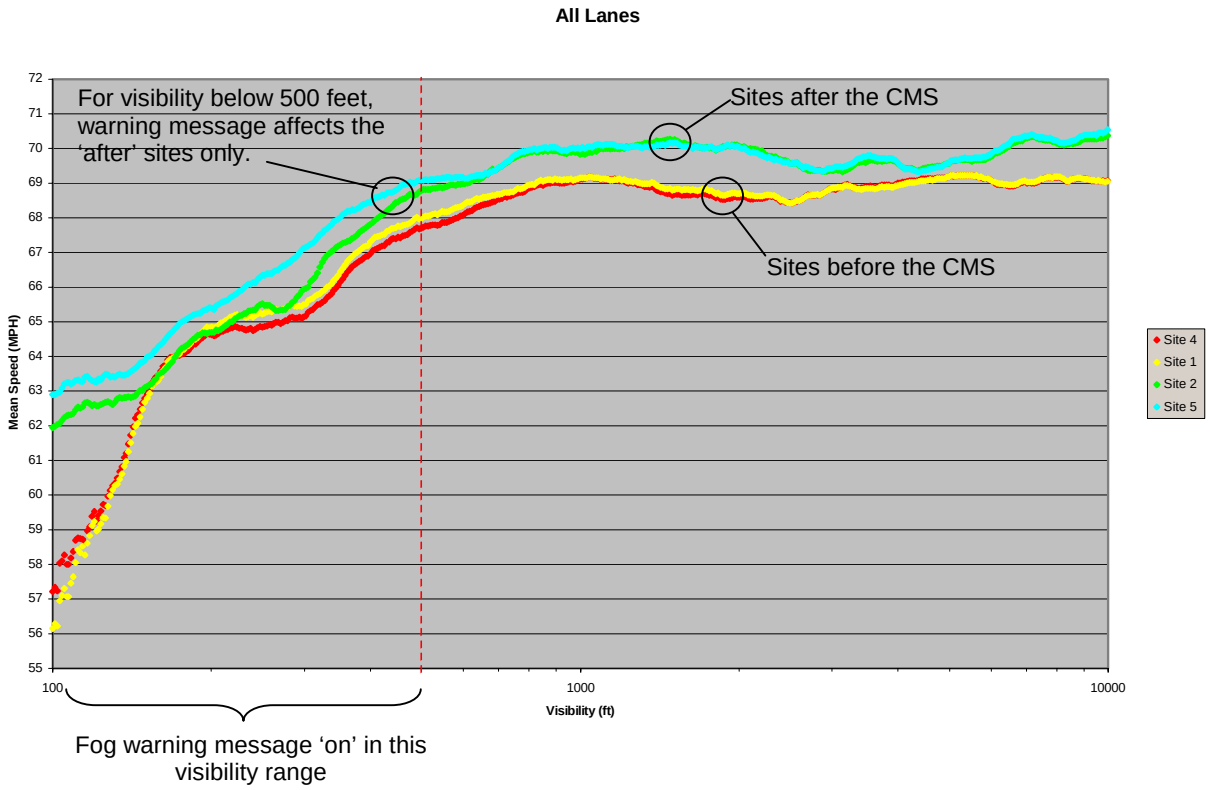

Figure 1.9.3.1. Mean speed as a function of visibility, all lanes at each site, day and night.

The significance of this plot, which represents over 300,000 vehicles, each recorded at four sites, is found in the difference in mean speeds between the two before and two after sites for visibilities below 500 feet, denoted by the dashed red vertical line. Below 500 feet, the CMS would display a warning message that would have been seen by drivers before arriving at the two after sites. Mean speeds in clear weather at approximately 1 mph faster at the 'after' sties than the 'before' sites, which are separated by 1.7 miles. Mean speeds decrease monotonically with the decrease in visibility at all sites. At the critical 200 ft visibility level, mean speed decreases by approximately 4 mph before the CMS, approximately 5 mph after the CMS. While speeds at the 'after' sites remain equal or higher, the differential effect may be attributed to the exposure of

drivers to the warning message, since all other attributes including the volume and traffic composition are identical at each site. The trend is not sustained at very poor visibilities such as 100-150 feet, but these situations are much less frequent than visibilities in the 200-500 foot range which dominate the mean calculations.

When segregated into measurements of each metric at each site, both in and out of fog, it is possible to isolate to a greater degree the effect of the CMS message from the natural response of the drivers: The CMS messages appeared to be responsible for an average incremental speed reduction of 1.1 mph and an average increase in PCS of 8.0 mph. Speed variance, as measure by the standard deviation of the speeds of proximate vehicles, was insignificantly affected.

Ramifications for traffic safety are contradictory: the speed reduction suggests increased safety, while the increase in PCS suggests decreased safety. Nevertheless, it appears that the system is achieving its desired affect. At least some subset of drivers is responding to the warning messages by decreasing their speed, although not nearly as much as advised: mean speeds remain above 60 mph even when visibility is below 200 feet. But as only a minority of drivers comply, the relative safety of the following distances, as indicated by PCS, are possibly being compromised – an unintended effect of almost any traffic management intervention intended to reduce traffic speeds (including reduced statutory speed limits).

The apparent paradox is due to two possible phenomena:

1. PCS is based on the minimum of the visibility distance or the following distance. When speeds are excessive for the visibility conditions, the visibility distance determines the PCS. If visibility gets progressively worse, PCS increases unless there is a commensurate decrease in speed. For example, as visibility decreases from 200 to 100 feet, a vehicle traveling at a constant 60 mph will report an increase in PCS from 39.9 mph to 55.6 mph. For PCS to remain 39.9 mph as the vehicle moves into the 100 ft visibility zone would require a speed decrease to 47.7 mph. Yet the prevention of multi-car collisions in fog requires exactly this. This explanation is pertinent to sparse traffic, typical during night and early morning hours. Since the overwhelming number of fog events occurred during these time periods, and in most cases the visibility gradient worsens as drivers transition from before to after the CMS, this phenomena is responsible for the majority of the 8.0 mph mean increase in PCS reported over all fog events.

2. In higher traffic densities, such as those encountered during the morning rush hour, a different phenomenon was observed. A subset of drivers slow down a few mph. The majority ignore the CMS. Those that slow down build more densely-packed platoons behind them that persist for at least the 1.1 miles from the CMS to the second ‘after’ site. The response of traffic is demonstrated in Figure 1.9.3.2 below, a pictorial diagram of actual traffic observed before and after viewing the warning message “DENSE FOG AHEAD, ADVISE 45 MPH” on December 17, 2004 at approximately 7:10 AM. Visibility at all sites was approximately 200 feet.

Approximately the same group of vehicles is depicted (matched by vehicle length and queue position), adjusted appropriately for travel time at each site. This view shows the apparent effect of a single vehicle slowing down, creating a platoon of increased density behind it. The net effect is manifests as a reduction in mean speed, and even a decrease in speed variance since all vehicles in each platoon tend to conform closely to the same speed. But PCS reveals the effect of the reduction in the following distances inside the platoon.

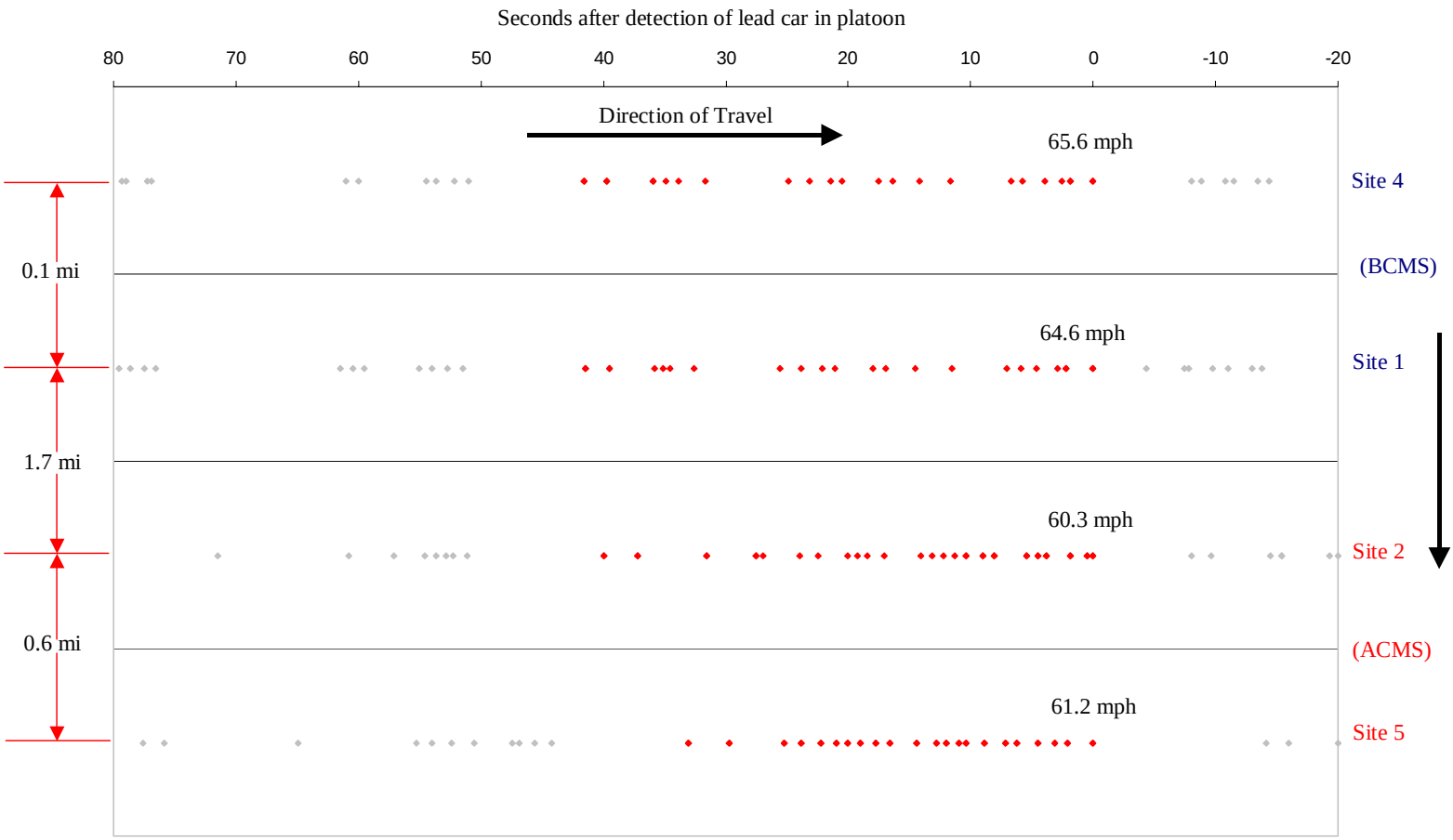

Figure 1.9.3.2. Traffic characteristics before and after CMS warning.

Is a reduction of 1.1 mph a significant response for a system of this type? In our review of other driver warning systems of this type worldwide, we consistently found impacts which differed from design expectations. As noted in the Driver Response Analysis, the evaluators of the ADVISE system (containing a single CMS) in Utah observed that when advised of a reduced safe speed in fog, speed variance was reduced but mean speed *increased* by 15%. The system probably most similar to the CAWS is the A16 active warning system in the Netherlands. The evaluators of this system reported an average reduction of mean speed of 5-6 mph at sites which benefited from dynamic speed limits, with almost no change speed variance. But there was a major

difference: the CAWS displays only advisory speeds. The dynamic speeds displayed by the A16 system were statutory. And European drivers on intercity motorways may demonstrate greater compliance with traffic management interventions in general. A number of studies in the USA and aboard have confirmed that drivers largely disregard statutory speeds, ignore advisory speed limits, and respond only to their own judgment based upon their perceptions – sometimes with fatal consequences in dense fog. From this perspective, the 1.1 mph mean speed decrease is strong evidence that drivers are actually responding to the system. Aspirations for speed compliance anywhere near the actual advisory speed would be totally unrealistic.

Can this possibly be effective in the reduction of catastrophic multi-car chain collisions in fog? Despite warning messages, it is disturbing to note that during fog event events, drivers in the CAWS area continued at mean speeds consistently above 60 mph even in visibilities below 100 ft. Observed mean speeds in visibility as poor as 700 feet did not differ from speeds under clear conditions, typically 69-71 mph over all lanes, and 74-76 mph in lane 1. Speed standard deviation was almost invariant with visibility conditions or the state of the CMS, staying within the range of 5-7 mph. In fog, PCS values between 45 and 60 mph were typical, whereas PCS values during moderate traffic averaged 20-30 mph. Note that if PCS approaches equality with the mean traffic speed, every vehicle on the highway would collide with an obstruction such as a prior collision without ever having the chance to brake. Or equivalently, a rear-end collision could not be avoided even in the case of normal full braking of a lead vehicle. This value of PCS is equivalent to an effective (visibility distance limited) gap time of 0.75 seconds, well below the 1.6 second limit generally recognized as the threshold of unsafe car following. Even a minor traffic disturbance could trigger a chain reaction. It would require a degree of driver compliance beyond that achieved by *any* warning system we are aware of in the world to achieve a sufficient uniform speed reduction to prevent multi-car chain collisions in dense fog. All that can be achieved is small mean speed reductions that hopefully improve the odds. This is not a weakness unique to the CAWS.

Could the CAWS be more effective in terms of driver compliance? The Operational Assessment of this report identifies a number of problems with the CAWS control strategy, some of which could contribute to reduced driver confidence in the CAWS. These include a lack of synchronization between fog warning messages such that drivers see a progression of possibly different advisories as they drive through the CAWS area; failure to activate warning messages for stopped traffic ahead unless all lanes drop below 50 mph, even if some lanes are blocked; failure to activate due in poor visibility if the relative humidity reading does not report RH>75%; and in the first year of operation, incorrect mapping of warnings to the intended CMSs. Possibly most significant in possibly reducing driver confidence is the lag time between an activation threshold (fog or speed) due to multiple polling cycles required prior to CMS activation. We observed an average delay of over 7 minutes for fog messages, and between 3 and 6 minutes for traffic warning messages. For transient fog conditions and rapidly forming traffic situations, delays of this magnitude can completely misalign the trigger condition with the warning message. The relative amounts of time the CMS 1 correctly and incorrectly displayed fog warning messages triggered by the fog sensor at weather station 1 are shown in Table 1.9.3.1 over the entire two-year period of the driver response analysis.

Table 1.9.3.1. CAWS activation delay for fog messages at CMS 1.

	Visibility				CMS Message		
	<500ft	>500ft	Total	Events	With Fog		Without Fog
					None	Fog	Fog
Total duration of display in minutes:	11145	732928.5	744073.5	166	2557	8588	2042.5

The table shows that during this period a fog warning message was displayed which matched the sensor data a total of 8588 minutes. But for 2557 minutes, no message was displayed when one was warranted. And for 2042 minutes, a fog warning message was displayed even though conditions no longer warranted it. (Times that a traffic warning message superceded the fog message were counted as valid fog messages.) The symmetry between the failures to warn and the false warning suggests that response lag is a much more significant contributor to incorrect CMS activations than any other factors the might affect the generation of fog warning messages.

It would be hard to believe that these factors did not have a deleterious effect on driver confidence in the system, at least for regular commuters. But the potential improvement, if any, cannot be predicted. It's important to note also that driver confidence is established from long-term experience on all roads, not just the CAWS, so that the CAWS could easily be a victim of inconsistent or unrealistic safety interventions state-wide to worldwide. Regardless, the extent of the confidence-degrading operational characteristics leads the evaluators to believe that the CAWs could potentially be more effective, possibly in to a substantial degree.

All weather station components were found to be operational and installed competently and in a professional manner. In fact, the sophistication of each weather station was well beyond the basic fog detection needs of the CAWS – each was an FAA-approved RWIS (Remote Weather Information System) normally deployed at airports. However, the periodic maintenance, repair and calibration requirements for the 72 precision weather instruments and related communications components were significant, and this workload stressed the staff and budget resources of the District. Weather system logs showed that some weather sensor information from one or more sites was usually missing at any particular time.

The CAWS relied on a total of 216 inductive loop detectors for its speed measurements, and at any time, at least some of these had problems. This is generally to be expected for highway loop detectors that are normally used for traffic management information rather than as critical sensors in an intelligent autonomous traffic management system. Communications were dependent upon leased line service provided by the local telco, Pacific Bell. This service was not completely reliable. While we did not have access to actual uptime records, we can infer from the Signview and TMS data logs over the two years of our driver behavior study that communications problems of various kinds were probably the most significant down-time issue for the CAWS.

Finally, we considered the effectiveness of the CAWs based on an examination of collision data, before and after the activation of the CAWS in November 1996, and in comparison with a control and two external comparison areas.

Based on both raw and all normalizations of the data, encompassing all weather conditions, traffic levels, and collision classes, we found the CAWS associated with increased rates of collision during the first five years after its activation, but a consistent improvement trend after 2001. Over the entire period 1997-2003 compared with the period 1992-1996, an average increase in travel-normalized collisions of 60% was observed in the study area, compared with 30% in the CAWS control direction and 25% and 62% of on two directions of comparison highways having somewhat higher daily traffic volumes (average 39%). For fatal and injury collisions an increase of 76.6% was observed in the study area, compared with 39.1%, 23.8%, and 55.3% (average 39.4%) on the control and comparison highways. Particularly problematic peaks were observed in 1997 and 2000-01. Results for targeted accident such as collision in fog, rear-end collisions, or secondary collisions ran more generally negative. However, for a few targeted classes of collisions such as secondary collisions in fog, a positive effect may be evident. Controlling for the potential affects of construction, peak and cross-peak traffic, and changes in the driver population over time did not significantly alter these conclusions.

In an attempt to better correlate collision rate changes with individual influences, we fitted data in the CAWS and the three comparison areas to several generalized linear regression models. Results were mixed. Our initial analysis suggested that the presence of the CAWS may be associated with a modest overall safety improvement. Best model configurations in this effort resulted in predictions of a possible reduction of 15% in overall collisions, and 12% in fatal and injury collisions. However, a subsequent effort using models recommended by our expert advisory panel concluded that the CAWS could not be associated with a statistically significant influence on overall collisions in either a positive or negative sense, and that the CAWS may be associated with a small increase in fatal and injury collisions. It was not possible to reliably model collisions in fog due to the relatively low numbers of this type of collision in all areas.

The somewhat large variations in collision rates year-to-year that appear in most of the per-year data presentations are also cause for concern when we attempt to interpret these results. Travel volume appears to play a dominant and nonlinear role in these variations, but other undetermined factors are clearly at work.

Regarding the single question, “Based on collision data of all types, did the CAWS appear to be associated with an improvement in traffic safety?” we and our expert advisory panel feel that the overall results are inconclusive. It is clear to us that by qualified but arguable choices of emphasis and admission of results, an overall conclusion could be driven in either direction. It would not be unreasonable to infer a net positive overall benefit attributable to the CAWS, but of unknown magnitude.

We can, however, present meaningful answers and conclusions to a wide range of more restricted questions, dealing with collision rate trends, specific collision types, severity, weather conditions, highway segments, and

the effects of a wide range of factors including traffic volume, congestion, roadway construction activities, speed, and more. Most important among these observations are:

All analyses concur that after the activation of the CAWS, there was a disproportionate elevation in collision rates of all classes and under all conditions at the Mossdale Y junction of southbound I-5 and westbound SR-120. This observation may be consistent with our finding of control strategy problems that particularly affect is area, but this can't be confirmed from accident reports or other definitive sources.

Results for SR-120 and I-5 north of SR-120 were considerably better, varying about a neutral-to-slightly-negative result in most analyses. On midday weekdays and weekend days, the results are neutral for the CAWS overall. The results are negative for the CAWS during weekday commuting and weekend evenings. During inclement weather, the collision rates increased in the CAWS study direction compared with other areas. During higher levels of service, collision rates in the study direction increased substantially compared with other areas. For lighter levels of service, results are close to neutral.

Of particular concern were collisions in fog, since the CAWS was specifically designed to reduce these. There appear to be desirable outcomes for the study directions on SR-120 and I-5 north of SR-120, however collisions in fog increased substantially on southbound I-5 south of SR-120. For secondary collisions in fog, a change in the collision type mix and lower increase than other areas suggest a positive effect for the CAWS, although the numbers are a bit small to be considered reliable. For all weather conditions, there was a substantial increase in the percentage of rear-end collision in the CAWS study direction after the CAWS compared with before the CAWS. When only rear-end collisions in fog are considered, the numbers also increased after the CAWS, but the amount of the increase was substantially less than the corresponding increase in the control areas.

The results of the examination of collision data, both positive and negative, should be considered in view of the limited response of drivers to CAWS warning messages confirmed in the Driver Behavior Analysis. It is possible that drivers do not alter any aspect of their driving behavior, but do benefit from a heightened awareness of potential hazards beyond the information provided by their own perceptions. This effect would be expected even from static advisory signage. We cannot enter the minds of drivers. But their measurable actions lead us to limit the range of influence that could possibly be attributed to the CAWS. It appears unlikely that drivers respond to dynamic messages to a sufficient degree to influence collision rates substantially in either a positive or negative sense. As previously discussed, this is a characteristic of motorists that is not necessarily attributable to the CAWS. Within these limits, it is our opinion that the CAWS had a sufficiently positive effect on the behavior of drivers to justify an optimistic view of the collision data.

1.11 Interpretation and Recommendations

The CAWS is impressive in both its level of innovation and potential. It was an ambitious project – one of the first and the largest fully autonomous driver information system of its kind in the world at the time of its activation. The fact that it was conceived, designed, implemented and is operated entirely by the engineering staff of a state agency not traditionally known for development of state-of-the-art technologies is a testament to the foresight, management and wealth of expertise in the agency. This was an experiment and investment that few other state transportation agencies have attempted. The evaluators considered it both a challenge and an exceptional learning opportunity to study every component and characteristic of this system over a period of years, and ultimately gain a fair and comprehensive sense of its effectiveness and potential. Beyond the results reported herein, the lessons learned are considered directly portable to the decision process for other active safety interventions of this type.

With a project of such ambitious proportions and goals, there is a natural tendency toward expectations beyond what is possible. Public expectations create pressures for glowing sound bites. The ever-present scarcity of resources demands evidence of a maximum return on the safety investment. Ultimately the most this or any driver information system can do is influence driver behavior, ideally in a way consistent with its advisory messages, but in general, any safety-enhancing way. It is easy to lose the perspective of how little drivers respond to any attempt to moderate speed, even statutory speed limits (discussed in Driver Response Analysis). In our examination of the CAWS, we kept reality in mind, and attempted to structure a comprehensive evaluation that looked not only at every possible measure of its safety effectiveness but also the details of its implementation which ultimate facilitate this effectiveness, and the ancillary benefits of the system. Considerations included lessons learned and experience gained as well as number crunched.

Evans, in a significant summary work on traffic safety (45) emphasized the importance of a “behavioral feedback factor” associated with any change in a roadway safety element, which could either amplify or negate the intended safety benefit. He cited several cases in which improved driver information actually resulted in overall detrimental effects on safety. One case, originally reported by Hakkert and Mahalel in 1978 (46), involved the modification of traffic signals in Israel to display a blinking green during the last 2-3 seconds of the green phase. They reported that this modification lead to an increase rather than the intended decrease in crashes.

Evans introduced the following relationship between the actual effect on safety ΔS_{Act}, and the expected or engineered safety effect ΔS_{Eng}

$$\Delta S_{Act} = (1 + f)\Delta S_{Eng}$$

where f referred to as the *human behavior feedback* factor, which can take positive or negative values. If f is zero, then the actual effect on safety is exactly as predicted by the intended or engineered effect.

In the case of the CAWS, one might consider ΔS_{Eng} to be the effect on speed or the reduction in collisions and collision severity that the presentation of fog and traffic warning messages was expected to engender. ΔS_{Act} is the resultant effect, when human behavior feedback is factored in. The specific value of ΔS_{Eng} is indeterminate, as is usually the case. The intentions of the system architects were to achieve the best safety improvement possible given the deployed resources.

If Evan's formula is applicable in this case, the CAWS results would suggest a value of f which is in a range, for example, $-1.0 < f < -0.5$ allowing for the mixed results of different views of the data. Indeed, there was surely some element of adaptation to the CAWs deployment, perhaps an increased sense of driver confidence based on the belief that advanced warning of hazards ahead would be provided by the CAWS. Or alternatively, a heightened sense of awareness based solely on the 'reminder to drive more safely' provided by CAWS CMSs, whether activated or not.

In a controversial recent work (47), Noland presents extensive data that shows that almost *any* highway improvement, most justified as safety enhancements, results in an *increase* in serious and fatal accidents. Common to both of the above-cited, and many other works on traffic safety, is the recognition that traffic safety enhancements of any kind rarely result in the effects predicted by intuition which focuses on the modification alone; drivers almost always adapt in ways that are often difficult if not impossible to predict.

It may not be surprising, then, that a well-intended improvement in driver information did not result in effects exactly as intended. In the present case, this inconsistency may be at least partially explained by a lack of driver confidence in the system, and issues discussed in the Technical and Operational Assessment may have played a small part. But based on the conclusions of other studies, the lack of a greater response is predominantly related to the general characteristics of motorists. Driver confidence is established over longer periods of time, and is dependent on the believability of signage, both static and dynamic, on all highways, not only the CAWS area. And significant changes in driver attitudes toward compliance with advisory messages are well outside the capabilities of the CAWS, or probably anything less than a greatly increased presence of law enforcement.

Considering the conclusions of all evaluation tasks together, the evaluators are of the opinion that the CAWS does provide a positive safety benefit, to a degree consistent with or slightly less than reasonable expectations as established by similar systems in the USA or Europe. We also feel that with minor corrections and enhancements, mostly in software, its potential may be greater than previously demonstrated. In addition, we feel that there is intrinsic value to a driver warning system of this sophistication that may transcend its immediately measurable or inferred affects on traffic safety, for example, reduction of congestion, faster

incident management, reduced travel time via driver advisories, Amber Alert capabilities, improved traffic and weather monitoring in general, direct interaction with news media, and even just an enhanced public awareness that Caltrans cares about their safety.

On the potential of the CAWS: As discussed in the Technical and Operational Assessment, the central control architecture of the CAWS facilitates much more sophisticated control strategies than those currently implemented. Features which could easily be incorporated in software include sensor validation and consensus by multi-site cross-checking, progressive fog warning based on inputs from all fog detectors treated concurrently, graceful degradation in the event of component failure, the ability to ignore incorrect information from field sensors and extrapolate reasonable values, and predictive warning strategies based upon detection of traffic and weather trends. Redundant distributed processing and/or communications paths could also reduce vulnerability to the failure or inaccessibility of the central control computer. Self-diagnosis and automatic technician alert capabilities could better assure rapid service in urgent situations. Pubic dissemination of weather and traffic conditions in the CAWS area via the Internet could extend the driver information function of the system. These features, mostly requiring only software upgrades, may be reasonably expected to enhance system effectiveness and possibly improve driver confidence in the system and therefore compliance.

Fewer than half of the weather instruments at each of the nine remote weather stations are used by the CAWS. The others currently serve no function other than remote data logging, and due to the proximity of the stations, this collection of weather stations may represent one of the most redundant weather monitoring facilities in the state. Yet, these instruments present the possibility of much more advanced driver information strategies, for example, the prediction of the approach of fog banks using the anemometer and wind direction sensor along with the visibility sensors, prediction of the formation of fog based upon temperature and dew point trends. Integrated with driver information services and warning networks in other areas, the advanced warning of driers before they decide to start through an area the will soon become foggy may be as great a safety enhancement as advising drivers already in the fog.

Finally, as a research facility, the CAWS and the CAWS Evaluation System already in place provides a unique opportunity to continue to study driver behavior, especially in fog, and the relationship between traffic characteristics and collisions. The CAWS clearly has untapped potential as a test bed as well as an operational safety enhancement.

1.12 Problems

Problem encountered during the course of this evaluation are listed and discussed in chronological order in the following “Implementation Schedule”.

1.13 Implementation Schedule

We present here the schedule of major evaluation activities and events as they actually occurred during the course of the study. Problems, both technical and institutional, encountered during the course of this study are described in chronological order.

September 22, 2000

Authorization to start work on evaluation project contract. Actual start of work on October 1, 2000.

October 17, 2000

Preliminary CAWS Evaluation meeting at Loragen Corp. with District 10 electrical systems chief.

November 2, 2000

Project kickoff meeting at Caltrans District 10 offices. Presented CAWS evaluation Technical Update and discussed evaluation objectives and methodologies. Electrical Branch Chief Clint Gregory identified as primary District contact for evaluation team. Four levels of evaluation presented. Electrical engineer Veronica Cipponeri is responsible for day-to-day operation of CAWS system. James Collins introduced as field technical support.

Discussed possible means to access the system for data collection purposes. Issue of external access limitations identified. No internet connections or phone modem access in District 10 TMC.

December 31, 2000

First quarterly progress reported submitted. Concluded that it would not be possible to collect field data using a single server located in the District 10 TMC. Need to install individual filed data acquisition systems identified. Architecture for a distributed three-site monitoring system specified. Reviewed results of preliminary literature on evaluation methods used for similar projects worldwide. Presented updated workplan based on new technical approach. Field data collection expected to start Fall of 2001.

February 2, 2001

Meeting in District 10 with Gregory and Cipponeri. First access to printed output of the Signview activation log. Unfortunately, it can only be displayed and printed one page at a time by the Signview program since it is in a proprietary format. Discussed ways to remotely access the Signview computer, but no solution identified. District felt it would be possible to get internet access to the Signview computer on the internet, but long approval process lay ahead. If this doesn't work out soon enough, they'll provide physical access to the archived data, which is stored periodically to Iomega Jazz drive tapes.

French Camp Slough control site isn’t powered, and this is needed to use it for evaluation data collection. Visited field sites to trace lines, possible communications and power sources. Site selection for CCTV monitoring cameras.

March 31, 2001

Technical meeting at D10 Office and work at field sites on I-5. Work on phone-line communications at Mathews Road and the CMS site. Work on detector issues at all sites. Reviewed potential communications solutions with District engineering staff.

Presented methodology for assessment of driver response to CMS message based on work of Pirkko Rama, from "Effects of Weather-Controlled Variable Speed Limits and Warning Signs on Driver Behavior", Transportation Research Record, from Nov. 1999.

Completed preliminary data collection from TASAS and other sources in support of collision data analysis.

Began work on CAWS weather server to be located in the District 10 TMS, to assist Caltrans with dissemination of information from the CAWS.

June 5, 2001

Released report on “Field Data Acquisition and Communications Systems” with detailed plans for all field data acquisition field components, central server, and surveillance cameras.

July 1 2001

Request by District that we provide a preliminary report on collision data before and after the installation of the CAWS.

July 23, 2001

Approved engineering plan for field data collection released in Quarter Report 3. Included detailed software specifications for monitoring, remote access, secure communications, and autonomous operation of equipment installed at each of the field sites in District 10. Video surveillance via internet-based network cameras specified.

Proposed statistical model-based accident data analysis to better isolate CAWS effect from other influences on traffic collisions.

Continued to work with District and Pac Bell to obtain communications with field data acquisition systems.

August 22, 2001

Field work – recorded weather system and Signview communications protocols at field sites so that we could reverse-engineer these to monitor CAWS communications with these field elements.

Released “Field Inspection Report” by email on CAWS system and progress in monitoring traffic, weather and CMS status.

September 1, 2001

Subcontract to Innovative Concepts for development of communications and data acquisition software to our specifications.

October 6, 2001

Traced inability to run a phone line to the French Camp Slough Count station to the lack of a short conduit between the Caltrans and PacBell demarcation boxes on French Camp Road. This is a jurisdictional matter as well as a resource issue. Changed plan to wireless CDPD modem communications for this site. Joel Retanan of Caltrans New Tech assisted our understanding of behavior of Signview software.

Transportation Engineer Kimberley Mastako hired to lead accident data analysis effort in progress.

Announced that lack of communications to field sites and not-yet-determined protocols for visibility detectors, CMS communications, and will delay start of data acquisition for 2001-2002 fog season.

October 11, 2001

Equipment was installed at French Camp Slough and Matthews Road. The CDPD modem and antenna was installed at French Camp Slough, although protocol problems prevented establishing communications at that time. The phone circuit at Matthews Road had not yet been activated. Video equipment was delivered to District 10.

October 18, 2001

Equipment at French Camp CMS installed, including the video monitoring equipment

November 13, 2001

Report "Explanation of reduced expenditure rate, FY 1 and 2 " provided at request of OTS. Described technical and institutional issues that delayed start of data collection.

November 29, 2001

Field data acquisition fully operational at French Camp Slough, CMS 1 and Mathews Road sites. Noticed unusual speed measurements from loops at French Camp Slough site.

December 12, 2001

Diagnostic work to get to bottom of speed measurement problems at French Camp Slough. Analog monitored and recorded outputs of detector cards. Investigated problems related to floating grounds and noise on communications and detector lines.

December 27, 2001

Activated real-time CAWS Evaluation web pages on Internet, showing data real time speeds, volumes and camera images from all field sites: http://caws-evaluation.loragen.com

On January 2, 2002

Secured services of Inductive Signature Technologies of Tennessee to diagnose loop detector problem at French Camp Slough, and calibrate detectors at Matthews Road. Installed experimental advanced detector cards to replace the standard Caltrans Model 222 cards. Recorded inductive traces from each loop. Traced wires in conduits. Also engineered and installed a new interface circuit with much greater immunity to possible EM noise in the cabinet.

A LIDAR gun was used to test and calibrate speed sensing at Matthews Road.

January 12, 2002

Principal Investigator attended the 2002 Transportation Research Board Annual Meeting in Washington DC; met with evaluators from similar projects.

January 22, 2002

Contract closure meeting with Innovative Concepts. Software/hardware not completed. Remedial plan worked out.

January 31, 2002

Delivered preliminary accident analysis report requested by District. This report studied accident statistics and records in and around the study area for a period of 4 years prior to and 4 years after system activation. The report was transmitted as an “Agency Confidential” draft document, subject to agency approval.

February 1, 2002

Began work on Linux-based central database server for evaluation, to replace problem-ridden Windows-2000 based server provided by Innovative Concepts.

February 7, 2002

Meeting in District office to finalize requirements and interfaces for CAWS Weather Server in TMC.

Further diagnostic work at French Camp Slough. Replaced IST 222 cards with regular GP6 cards. Found an old as-built diagram for French Camp Slough, which confirmed suspicions of the presence of two sets of trailing loops, long since paved over.

February 25, 2002

Principal Investigator participated in the “Fog Forum II” meeting, hosted by Caltrans District 10. Made two presentations: the first summarizing the status of the CAWS evaluation projects, and the second a comprehensive review of all other automated driver warning systems in the world, and any available evaluation results reported for each.

February 28, 2002

Decommissioned Windows-2000 based central server. Switched to new Linux server. No problems.

Determined from recorded inductive traces that trailing loops at the French Camp Slough site must be connected in series, which probably never showed up in count data when this site was used as a count station. Emailed report of possible reasons for loop problems. Loops at other CAWS sites may be similarly affected.

March 14, 2002

Completed and delivered report requested by Caltrans operations on 85th percentile speed data for traffic flowing through the study area parametric with visibility. We generated this analysis from data acquired at the Mathews Road site.

Conference call with District personnel and IST engineers to discuss loop detector accuracy problems.

March 18, 2002

Meeting with Robert Spradling at District Office to discuss requirements for installing the D10 weather web server in the TMC.

March 21, 2002

Found source of problem at French Camp Slough was undocumented series connection of old and new loops together in junction box. Corrected the situation by isolating loops. Since old (unknown) loops were in better conditions than new ones, so we utilized mix of loops separated by 36 feet for speed measurements. Also installed 3 updated IST 222 cards at French Camp Slough.

March 29, 2002

LIDAR gun calibration of French Camp Slough loop detectors.

April 14, 2002

Lane 3 detector at French Camp Slough failed.

April 15, 2002

Updated work plan to accommodate delay of data collection to 2002-2003 fog season.

April 18, 2002

Replaced IST 222 card from lane 3, which corrected the detector problem. Loop detectors finally fully operational at French Camp Slough.

Updated CAWS evaluation website, and added CMS-character recognition feature.

May 17, 2002

Formal response to Caltrans comments on Preliminary Report on Accident Data.

Work in progress on follow-up report incorporating results of specific additions requested in Caltrans comments, e.g., an analysis of secondary accidents.

July 1, 2002

Hired Melanie Benabides to continue work on accident analysis, addressing all Caltrans comments and concerns. Hired Chris Ackles as senior engineer on evaluation project.

July 30, 2002

Data collection stable at all field sites. Collecting baseline data from summer.

August 9, 2002

Additional comments on preliminary accident analysis received from District and responded to. Preliminary results of secondary accident analysis reported.

August 15, 2002

Preliminary accident analysis report review completed by Fred Rooney of Caltrans Traffic Operations. Provided prior 1969 Caltrans unpublished report confirming similar findings.

October 18, 2002

A truck hit a CMS sign located on Northbound I-5, intermediate between the French Camp Slough and CMS monitoring sites. The impact caused a loss of electrical power to all sites of our study until December 15, 2002. This eliminated the most important period of this fog season.

November 1, 2002

Intermittent leased line communications becoming a major problem at Mathews Road. Unknown cause. Continued to plague this site until December 19, when problem was traced to lack of a common ground for telephone cable.

November 15, 2002 (estimated)

At about this time, grading and paving work was done to create an additional high-speed access lane at the French Camp Slough site. As a result of this construction work, the pull-boxes connecting the loop detectors at this site were destroyed. Connections to all loops in two of the three lanes at French Camp Slough were lost permanently. Date is approximate since no power to the site during this period. Problem was initially thought to not be severe, and cut loop cables were reconnected as well as techs could figure out. Since power was down, we couldn't verify it these were reconnected correctly or not.

December 15, 2002

Power restored at French Camp Slough site.

December 16, 2002

Formal response and updated accident analysis report provided to Caltrans on accident analysis.

December 21, 2002

Revision 2 "Preliminary Evaluation of Traffic Safety Impacts of the Caltrans District 10 Automated Warning System (CAWS) based Upon Accident Data" completed and selectively released for review by District 10 personnel. Contained updated results of all analyses and requested secondary accident and cross peak traffic accident analyses.

December 19, 2002

Communications problem at Mathews Road traced to the apparently standard practice of not connecting the telephone cable ground to the cabinet ground. This created a ground loop which caused noisy communications, which became worse under wet conditions. Same situation was found at other CAWS sites, suggesting that this problem may be at the root of intermittent communications problems with some CAWS traffic or weather monitoring stations. Reported this finding to district technical personnel.

January 9, 2003

Definitively determined from loop data at French Camp Slough that loops had been reconnected incorrectly. Learned that since original loop connections had been destroyed beyond repair, cables had been reconnected to remaining available loops, some in the wrong lane.

January 21, 2003

Trip to field sites to survey damage to loops at French Camp Slough, and check if any possible reconnection strategy could give use speed data.

Problem with data acquisition computer at CMS site – condensation in cabinet caused failure of motherboard. Replace computer.

Visibility sensor a Mathews Road, down for previous three weeks, repaired by district personnel but still reporting incorrect data. Problem ultimately determined to require replacement of PCB in Qualimetrics visibility sensor in April. Visibility data at CAWS weather Station 1 unreliable until then.

January 24, 2003

Noticed from CMS monitoring data that the CAWS warning messages for fog had been changed to specific 45 and 30 mph speed advisories. Called and confirmed this with Clint Gregory.

January 30, 2003

New motherboards for all field computers out of concern for condensation damage.

February 23, 2003

Brought up redesigned CAWS evaluation to http://caws-evaluation.loragen which allowed images to be searched and downloaded more easily.

March 20, 2003

Site engineering survey at French Camp Slough to replace destroyed loops. Total of 12 loops were found at the site at irregular spacing and with undocumented connections in pull boxes. Exact physical location of loops remains unknown due to prior over-paving.

March 30, 2003

CAWS weather server in TMC stopped reporting updated weather data by highway segment. Problem was traced to the clock drift between CAWS weather server and QCMS computer (part of the CAWS control system). At some pint, the server treats the weather data as to old to be displayed, even though data is current. Lack of a mechanism for time synching the CAWS computers identified as an operational problem, not just a problem for matching the log files of each system.

While in TMC, found suspected email-borne virus in District Intranet computers (inside firewall). Possible ramifications for CAWS weather server which, but no effect on CAWS itself since they are not networked.

Upgraded network cameras at CMS site, including taller pole, improved condensation and dust-free enclosures.

April 5, 2003

Purchased and shipped replacement PCB for Qualmetrics visibility sensor at Mathews Road (CAWS Weather Station 1). District installed and re-calibrated sensor a few days later. Visibility detection at WS 1 operational again.

April 8, 2003

French Camp CMS and Mathew's Road sites both down. Problem eventually traced to power outage effecting I-5, lasting two days.

April 15, 2003

Pac Bell communications problems affecting all CAWS leased lines in area, including our CMS and Mathews Road sites. Problem lasts for three weeks until resolved after meeting by James Collins with PAC Bell.

April 22, 2003

All CAWS Traffic monitoring stations that were down due to phone company problems are said to be back on line.

April 23, 2003

Visibility sensor at French Camp Slough fails. Problem attributed to PCB. New visibility car purchased by Loragen and installed by District at French Camp Slough site.

April 25, 2003

Lost communications with phone-line connected test sites (Mathews Road and CMS). Problem traced to cut-off of service without warning by IVWnet, the local ISP.

April 28, 2003

Transition to CDPD modems at southern two sites (French Camp CMS and Mathews Rd) due to continued unreliability of lease-phone-line based field communications.

May 2, 2003

Status report on Loops at French Camp Slough site, communications, and access to Weather Server for CAWS web site update.

May 5, 2003

Visibility sensor at French Camp Slough still not operational after PCB replacement. District technician indicates that sensor has been installed and is working, but has not been calibrated.

May 22-30, 2003

Loragen proposes to District two additional test sites, one before and one after CMS, to assure redundancy in view of number of calamities which plagued the test bed during the previous fog season. Dialog with District regarding obtaining to construction records during the test period, loop replacements and cost, visibility board calibration for French Camp Slough, 802-11 modems wireless field network to be installed by District, time drifting of CAWS system vs isolated CAWS Weather Server in the TMC.

June 4, 2003

Final decision to replace all phone communications with CDPD modem service, which has proven to be much more relatable than land-based phone lines and ISPs. Concern about planned termination of CDPD services by AT&T.

June 15, 2005

Received no-cost project extension of two years, through June 30, 2005, to assure that we acquire complete data over two full fog seasons.

June 27, 2003

Unable to NTP time synch CAWS weather server through District firewall. Change in VPN security settings eventually found to be the problem.

June 30, 2003

CDPD modems and services activated for installation later at two field sites.

Jul 1, 2003

New loops installed by Caltrans at French Camp Slough in all lanes.

Colin Bortner hired to support evaluation needs in District 10 office.

July 2-4, 2003

Installation of wireless CDPD modems and redundant communications software at CMS and Mathews Road sites. Noted that communication at these sites still intermittent due to unreliable leased lines services. This problem continues to affect CAWS as well as the evaluation test sites.

July 7, 2003

Meeting at District 10 Office. Reduction of construction record data and possible means to gain access to the CAWS web site in the TMC for maintenance and upgrade purposes (VPN client, collocation of server at Loragen, direct dial-up modem access, or access through D4 were discussed).

Identified proposed exact locations of two supplemental field station: Downing Road, just north of the French Camp Slough site, and CAWS Speed Detection Station 1B approximately 0.6 mile south of the Mathews road site).

Received raw text printout (over 1000 pages) of all construction encroachment permits issued on I5 and SR120 over the 10-year study period. Began sorting through this information manually and obtaining information pertinent to the CAWS area.

July 18, 2003

CDPD modem problems required re-installation at FCS and Mathews Road sites. Upgraded OS at all sites. CAWS Weather Server data backed up in D10 TMC.

July 22, 2003

CAWS Weather Server manual written for D10 staff use. Document explains how to periodically back up data and troubleshoot.

August 20, 2003

Started construction of equipment for two additional evaluation test sites.

August 21, 2003

Problems with surveillance Netcams. We worked with manufacturer (StarDot Technology) to fix the problem remotely, but were not successful. Ordered replacement camera.

August 27-29, 2003

Replaced defective camera at CMS monitoring site. New installation of loops at French Camp Slough was inspected and traced. Loop separation and positions were incorrect, but can probably be compensated for in software.

September 13-14, 2003

Installation of loop detectors at new site at Downing Road. PI present during 4:00 AM lane closure to observe and check dimensions. Serviced CAWS weather server. Identified problem of loss of communications from all CAWS weather stations, traced to phone company.

September 15, 2003

Visibility sensor at French Camp Slough repaired and calibrated by All-Weather tech rep, after extensive negotiation with All-Weather.

New loops re-wired in at French Camp Slough to fix cross-talk. Problem with loop pair in lane two at Mathews Road repaired by installation and proper tuning of new 222 card.

October 1, 2003

Start of 2003-04 fog season, considered critical for this evaluation since prior two season were lost.

Field cabinets with card racks for 222 loop detector cards were installed by Caltrans district 10 personnel at the new data acquisition sites at Downing Road and El Dorado Overcrossing (Loop detector site 1B). Loops installed Sept 13-14 were connected to these field cabinets. Loop detector inaccuracy problems at all sites found to be related to excessively high sensitivity setting used as Caltrans standard practice.

Communications problems with all CAWS weather stations discovered Sept 13 finally resolved by the phone company (Pacific Bell).

October 9-10, 2003

Installation of data acquisition and communications equipment at Downing Ave and El Dorado Overcrossing.

October 13-17, 2003

Modified CAWS web page to include the two new field sites.

October 21, 2003

First of a series of problems with CDPD modem service: high latency times when communicating with the El Dorado Overcrossing Site. Installed high-gain cellular antenna at site on advise of Airlink Communications.

October 24, 2003

Problems with traffic speeds reported by French Camp Slough site in Lane 1. Problem eventually traced to poor connections to the 222 detector cards in the cabinet, possibly a result of the new loop installation work.

October 31, 2003

Power outage in study area. Field systems shut down gracefully after expending battery backup time at all sites, then restarted successfully following restoration of power.

November 1-15, 2003

Developed and deployed custom software to more reliably handle intermittent power outages than utilities provided by UPS manufacturer.

November 15, 2003

Occlusion of CMS monitoring camera due to rain, spider web and road debris accumulation. Periodic maintenance schedule established for cameras.

November 23-25, 2003

Loss of communications at Downing Road site. Entire system unit replaced since problem was found to be due to a faulty hard disk controller.

December 2, 2003

Image records in our database indicated that CAWS system activated CMS 1 several times for severe weather, but our CMS activation database showed no record of this. Image database for November 17 showed retrofitting work being done on CMS (changed from incandescent to LED display) by Caltrans, which required shutdown of power at that site. Evaluation system continued to operate on UPS power, but when the site was re-powered, it no could monitor communications from 170/CMS controller. Ultimately, problem fixed by remote restart of the CMS monitoring process.

Requested ATMS/Signview records during this period, so that we may manually update our database. Since these records are only readable a page at a time on the Signview and TMS computers, printing of records for periods more than a few days require a lot of work by District personnel. Recognized the need for a utility to translate Signview and TMS log files into text readable format as aid to District as well as our operational assessment.

December 12, 2003

Veronica reports all CAWS speed monitoring and weather stations south of Mathew's road are down due to unknown causes. Our systems, on CDPD modems, continue to operate. CAWS problem traced to phone connectivity rather than power outage, and CAWS sites remained functional, but not communicating with TMC. Problem eventually traced to telecom hardware failure in TMC.

December 18, 2003

Visibility marks placed at specific distances from our traffic monitoring camera for verification of visibility distance reported by sensors.

January 1, 2004

Ed Sullivan, James Daly, and additional student assistants were employed to extend and complete the analysis of external factors that may have contributed to accident statistics in the CAWS, a project started by Melanie Benebides and Kimberley Mastako.

January 2, 2004

Qualimetrics weather computer receives framing errors for several hours when attempting to acquire data from the weather stations. Analysis of event lead to discovery that weather alarm flags maintain their present state during communication outages with weather stations leaving old warning messages up until communications re-established.

January 11, 2004

Incident in dense fog occurred. Analysis of data lead to first concerns about the CAWS control strategy.

January 21, 2004

14-hour period of severe fog period. CMS activated correctly and data collected by all our instrumentation. First complete record of operation of system with all five sites fully operational to support driver behavior analysis.

January 29, 2004

Received official VPN client configuration document and Cisco VPN software (bundled with hard-coded configuration for Caltrans NorCal VPN access point). Setup of VPN access to our CAWS weather server in TMC.

February 17, 2004

Meeting in Sacramento to obtain access to Signview and TMS software source code, so that we could investigate reasons for operational problems we were observing from our instrumentation and from samples of logs from these systems provided by District. We are permitted to view but not copy Signview source code on a notebook computer. Presented an update on the evaluation project for DRI personnel and justified our need for access to CAWS source code to identify details of control strategy and to permit us to read Signview log files.

February 19, 2004

VPN connection successfully established with District 10 TMC. Now able to remotely access and update software on our CAWS weather intranet server computer.

February 23, 2004

Andrew Lee successfully negotiates access to Signview and TMS source code for us. We receive, sign and return a non-disclosure agreement provided by Caltrans Operations.

February 25, 2004

Observed rain and high-wind conditions. Mathews Road CMS automatically activated “Gusty Wind Warning” message. This is a relatively rare condition, involving a trigger other than fog or traffic.

February 27, 2004

Received archived logs generated by the TMS, weather monitoring, and Signview computers between August 2003 and December 2003.

March 4, 2004

Caltrans authorization signatures obtained on non-disclosure agreement for source code access. We receive TMS and Signview source code. Work begins on study of source code to attempt to understand the CMS activation control strategy and to determine means to read the Signview and TMS log files (weather monitoring system log files are already plain text).

March 5, 2004

Received archived logs generated by the TMS, weather monitoring, and Signview computers from December 2003 to the end of February 2004. Started development of computer utilities to decode these, now that we had the Signview and TMS program source code to allow us to reverse-engineer the encoding scheme.

March 8, 2004

Downing Rd. site was no longer reporting data to the CAWS Evaluation Server. Problem found to be a power outage that lasted longer than the UPS battery life on 3/6/2004. Concluded that power might have been temporarily shut off during roadway construction.

March 12, 2004

Sent email to Signview program primary author Celso Izquierdo, at Caltrans HQ. Requested clarification of Signview’s 88:88 message timeouts and blank messages, and lack of sign blanking commands in Signview logs.

March 19, 2004

CHP information officers in Stockton and Manteca offices will provide accident data during the 2003-04 fog season, not yet available in the TASAS database, which is typically one year behind.

March 22, 2004

District CAWS personnel interviewed to best benefit from their knowledge and experience with the control strategy of system, since no documentation available. Since Signview logs do not record times that messages are turned off, we work out strategies to infer this from other logs and events.

Need for access to SV170 source code is recognized to resolve some unusual system response observations, and we began the approval process.

March 23, 2004

Another extended power outage event occurred at the Downing Rd. beyond the UPS keep-alive capacity.

Problems with traffic speeds reported at the French Camp Slough site in Lane 1. Found to be due to problem with the 222 back-plane in cabinet. Replaced PC-interface device anyway.

March 24, 2004

Request for access to SV170 source code not permitted for security reasons.

March 25, 2004

Email to Clint Gregory requesting a meeting to go over data that seemed to indicate possible problems with CAWS.

March 26, 2004

Problem with 222 detector card at Mathews Road sites traced to new card being set to pulse mode for lane 1 (should be set to presence mode). Cards at all sites swapped out and replaced with a Sarasota GP6C cards for consistency. Detector sensitivity settings corrected.

March 30, 2004

Phone meeting with District to discuss data indicative of possible problems with CAWS control strategy.

March 31, 2004

Received raw traffic accident records from CHP for recent accidents near the I-5/SR120 Y in support of accident data analysis.

April 21, 2004

Presented “Preliminary Observations from Available Data” at meeting at District office with Caltrans District and DRI personnel.

July 12, 2004:

Loragen proposes to take responsibility for fixing two of the operational issues cited: problem of time synch and inability of Signview to log times that messages are turned off. These problems do not effect actual operation of CAWS, but make evaluation much more difficult.

District OK’s work on the logging problem, but plans a network solution to time synch of CAWS computers.

July 14, 2004:

Search begins for original complier used for Signview, so that any change we make would not effect any subtleties of the previous compiled binary. District and DRI assist but version provided is incorrect. It was necessary to purchase (from E-bay) and test several early-90's versions of Borland Turbo C to find the actual version used, by comparison of complied binary files with existing CAWS binaries. Version eventually identified as Borland Turbo C++ 3.00 on August 16.

July 19, 2004

We ask Clint if he had received the Turbo C compiler from Joel and request that he sends down the CD when he receives it. We ask whom we should contact about the source code change to add logging of automatic blanking messages to Signview. We volunteer to assist with the network time synchronization solution.

July 30, 2004

Developed Potential Collision Speed (PCS) as a real-time metric of traffic safety especially suited to visibility-limited situations. Applied this evaluation data and verified effectiveness and sensitivity to small changes in traffic safety in fog. Originally normalized this value to the free speed and reported it as "Risk of Collision" (ROC), but the acronym was later dropped.

August 4, 2004

Visibility sensor at CAWS weather station 1 reading erratically low compared with the sensor at French Camp Slough.

August 19, 2004

District reports that a fix for the timing issue between the TMC computers would be in beta test by the end of August.

Weather Station 1 (Mathews Road) visibility sensor recalibrated.

Loragen hires Jasmine Noriega to assist with support of evaluation in District 10 office.

August 23, 2004

VPN connection to the D10 weather computer discontinued due to change in Caltrans security policy.

August 24, 2004

We noticed that visibility seemed consistently higher at Weather Station 1 (Mathews Road) when compared to French Camp Slough weather station. Eventually recalibrated which corrected problem, but concern over data skew from past several months.

August 26, 2004

We send detailed instructions on the Signview source code change so that it will log automatic blanking messages.

September 7, 2004

El Dorado Road down due to extended power outage. Corrected Sept 9.

September 9, 2004

Joel Retanan makes source code changes to Signview and tests. CMS blanking messages now being logged. New version designated Signview 3.12 in the TMC.

Loragen ships a new loop interface device for installation on Monday morning (9/13) in case this has failed after power outage at El Dorado site.

September 13, 2004

Veronica informs us that the Weather stations are not reporting to the TMC. Problem is was cured later that day by manually resetting weather station 3.

Jasmine installs a new loop interface device at the El Dorado speed site. Work was preventative maintenance only, since system was already operating correctly for the previous three days.

Loragen requests permission to videotape traffic in the Mossdale Y section to better understand the traffic and system response apparent from data logs.

September 16, 2004

District expresses concerns about videotaping on highway based on safety, legal issues and relevance to study. Permit would be needed with California Film Commission. Discussion of request continues for several weeks.

September 23, 2004

James Collins (primary CAWS field support person) no longer at District 10 due to lack of resources.

September 30, 2004

Waiver obtained from California Film Commission to videotape traffic on highway for scientific purposes.

October 2, 2004

Installed two additional remote network cameras to observe visibility and traffic conditions at French Camp

Slough and Mathews Road, have been added to the CAWS evaluation web site. Installed a third temporary camera on tower at Weather Station 9 with a view of the Mossdale “Y”.

Installed precision time reference cards in all CAWS computers (under supervision of District personnel) to assure time synchronization.

Replaced a hard disk at Downing Road site and got to the root of it’s persistent failure problem – water accumulation in the cabinet due to roadway runoff.

October 15, 2004

Secured commitments from original external advisory panel: Dominique Lord of Texas A&M, James Moore of USC, Bob Layton of Oregon State University, Richard McGinnis of Bucknell University. We are also in the process of selecting a Caltrans internal expert on safety to serve as a primary data reviewer.

November 1, 2004

Began final report. Defined 5 Sections corresponding to each evaluation task and a summary section.

December 20, 2004

Completed work on the multivariate regression accident analysis, for data available up to the present fog season.

January 12, 2005

PI attended the 2005 TRB Annual Meeting in Washington DC, and presented a paper “Methods and Metrics of Evaluation of an Automated Real-time Driver Warning System”.

At TRB meeting met with Richard Van der Horst, the principal evaluator of the Roadway Safety Enhancement System of the Drive II project. Also, met with members of the external advisory board, which was appointed to provide an outside independent review of the evaluation methods and results.

February 8, 2005

District 10 move of TMC to new building delays response to our request for copies of the CAWS log files from 2004, required for our assessment of the system operation.

February 12, 2005

Lost contact with the network camera at Weather Station 9 (Mossdale Y). No reason determined.

February 20, 2005

Severity of the CAWS response lag became apparent from analysis of data: delays between 3 and 18 minutes for fog activations, with mean delay over 7 minutes. 3-6 minute delays typical for traffic activations For some fog activations, the fog peak is missed completely. Reported observations in Quarter report.

Observed that speed standard deviation changes very little under any conditions, contrary to report from some other studies.

March 1, 2005

We have begun the process of transitioning the operation of the CAWS evaluation system to Caltrans responsibility, including preparation of detailed Operators Manual.

April 12, 2005

Delivered CAWS “Evaluation System Operators Manual” to Caltrans District 10.

April 26, 2005

National Visibility Web Conference presentation by Clint Gregory of District 10.

May 27, 2005

Evaluation System Handoff meeting. Delivery of CAWS Evaluation Server, all software and documentation to Caltrans District 10. Setup in TMC but not Internet connection yet so not possible to get operational. We agreed to maintain a backup transition server and wireless contracts for District until July 1, to avoid any data loss.

June 1, 2005

Plan approved for completion of complete Evaluation Report over summer, with final report to be delivered at end of summer. Work on final report entire focus.

June 30, 2005

Contract end.

July 1, 2005

CDPD wireless services end. No more contact with evaluation data acquisition systems in the field, although data will be retained on systems to capacity of hard disks, estimated to last at least two months.

August 1 – September 11, 2005

Incremental delivery of five volumes of Project Final Report.

1.14 Documentation

The documentation section of this report is comprised of four subsequent volumes, each a complete report on one of the tasks under this evaluation contract. These contain all evaluation results and methodologies, and documentation of all deliverables:

Analysis of Driver Response to CAWS Warning Messages	**Vol. 2**
Technical and Operational Assessment	**Vol. 3**
Evaluation of Traffic Safety Influence Based on Historical Collision Data	**Vol. 4**
Technical Deliverables	**Vol. 5**

1.15 Cited References

1. National Center for Statistical Analysis and National Highway Transportation Safety Administration, Fatality Analysis Reporting Systems (FARS, formerly Fatal Accident Reporting System). http://www-fars.nhtsa.dot.gov/queryReport.cfm?stateid=0&year=2002

2. National Cooperative Highway Research Program (NCHRP) “Synthesis 171, Highway Fog-Visibility Measures and Guidance Systems,” National Academy of Science Transportation Research Board Report No. 171, Washington, DC., 1976.

3. National Cooperative Highway Research Program (NCHRP) “Synthesis 340, Assessment of Advance Technologies for Relieving Urban Traffic Congestion,” National Academy of Science Transportation Research Board program report No. 340, Washington D.C., 1991.

4. National Cooperative Highway Research Program (NCHRP) “Synthesis 228, Reduced Visibility Due to Fog on the Highway,” publication SYH228, National Academy of Science Transportation Research Board, Washington D.C., 1996.

5. National Cooperative Highway Research Program (NCHRP) “Synthesis 311, Performance Measures of Operational Effectiveness for Highway Segments and Systems,” National Academy of Science Transportation Research Board Report 311, Washington D.C., 2003.

6. Hogema, J.H., Van der Horst, R., Van Nifterick, W., Stoop, J. “Evaluation of an automatic fog-warning system.” J. Traffic Engineering and Control, 37, No. 11, p 629., 1996.

7. Remeijn, H. “Dutch fog-detection and -warning project.” Road Traffic Monitoring and Control Conference, IEE Publication n 355. Publ by IEE, Michael Faraday House, Stevenage, Engl. p89-93 1992.

8. “Weather-Controlled Road System,” A sequence of five weather monitoring stations, 66 variable speed limit signs, and 13 variable message sign, deployed on the E18 in Southern Finland. Operational since 1994. http://swutc.tamu.edu/Reports/Compendiums/Papers/Paper%207%20Scott%20Harry200.pdf

9. Cooper, B.R. and Sawyer, H.E. “Assessment of M25 automatic fog-warning system - final report.” Project Report 16. Transport Research Laboratory, Crowthorne, England, 1993.

10. Wilkie, J.K., “Variable Speed Limit Systems on Urban Freeways: Review and Recommendations,” Proc. 8th Annual ITS Meeting, Detroit, MI, ITS America, Washington D.C. 1998.

11. Robinson, M. “Examples of Varible Speed Limit Applications”, DOT Rural ITS Task Order DTFH61-98-C-00073, presented at Speed Management Issues Workshop, Transportation Research Board 79th Annual Meeting, Jan 2000.

12. Hill, M. “Idaho Storm Warning System,” Final Report to the US DOT/FHWA, 1993. http://www.itsdocs.fhwa.dot.gov/jpodocs/repts_te/@cc01!.pdf

13. Strong, M P. “North Carolina Experimental Evaluation Project 170-3(5) Fog Detection and Warning Device, Final Report.” North Carolina Department of Transportation, Planning and Research Branch, P.O. Box 25201, Raleigh, NC, 27611, 1985.

14. George, L.E “Fog Warning Sign System”, ITTE, California University, Berkeley, /Proc, 2nd Ann Symposium, pp 23-24, Dec. 1969.

15. L. E. ; Hofstetter, D. K. ; Wagner, D. R. “Variable Message Fog Hazard Warning Signs to Control Vehicle Operating Characteristics, Final report. Nov 68-Jun 79, Federal Highway Administration, Salem, OR. Oregon Div. Report Number: 79/3; FHWA/OR-79/3. June 1979.

16. Oregon Dept. of Transportation, State Highway Div., North Albany “Variable Message Fog Hazard Warning Signs to Control Vehicle Operating Characteristics. Final report to the National Safety Council, FHWA,” Report No. 5149-602-08 Contract Number: DOT-FHWA-41L4014; HPR-1(6), April 1972.

17. Virginia Dept. of Transportation, “Fog Warning System To Be Installed On Virginia's Highway System At Critical Locations,” Journal of American Highways Vol 50, No 4, P 15, Oct 1971.

18. Georgia Dept. of Transportation, “Automated system will warn drivers of low visibility,” Civil Engineering, American Society of Civil Engineers, V. 65, p. 28 Apr 1995.

19. Sanders, J. “Happy Motoring on Safer Interstate Highway - High-tech fog warning system developed at Georgia Tech will issue advisories to motorists.” Georgia Tech Research Horizons, 2001. http://gtresearchnews.gatech.edu/reshor/rh-ss01/fog.html

20. “ITS in Tennessee: Fog Project on I-75 between Chattanooga and Knoxville,” U.S. US DOT/FHWA ITS Benefits and Costs Database, Dec 1999. http://www.benefitcost.its.dot.gov/ITS/benecost.nsf/ID/583F256CEA4239E685256AFD006764DF

21. Dahlinger, D; McCombs, B. “Fog Warning System Provides A Safety Net For Motorists,” Journal of Public Works Vol: 126 No. 13, pp 36-37, Dec. 1995.

22. Pietrzyk, MC; Turner, PA; Geahr, SL; Apparaju, R. “Evaluation Of Motorist Warning Systems For Fog-Related Incidents In The Tampa Bay Area,” Report Number: ESC-DOT-96/97-7007-TO, Center for Urban Transportation Research, University of South Florida, 4202 East Fowler Avenue, Tampa, FL, 33620, and Florida Department of Transportation, 605 Suwannee Street, Tallahassee, FL, 32399-0450, 1997.

23. Northern Arizona University, “The Variable Speed Limit Project, I-40,” http://www.cse.nau.edu/~jpl/VSLProject/ , 2001.

24. Martin, P., Perrin, J., Cottrell, W., Coleman, C. Adverse Visibility Information System Evaluation (ADVISE), Final Report UTL-0300-28/02 Univ. of Utah Traffic Laboratory, June 2002.

25. UDOT Research News, 2000-4. http://www.dot.state.ut.us/res/research/Newsletters/00-4.pdf

26. Wynn, C. W., “Operation Fogbound” – Accident Reduction Plan,” California Highway Report, Stockton Office, October 1972.

27. California Highway Patrol, “Operation Fogbound,” presentation at California interagency Fog Forum, California Department of Transportation District 10, 1999.

28. Georgia Department of Transportation. “Research and Development: Fog Detection and Warning System”. URL: www.dot.state.ga.us/homeoffs/fpmr.www/fog1.html, 1996.

29. Wynn, C. W., “Operation Fogbound” – Accident Reduction Plan”. California Highway Report, Stockton Office, October 1972.

30. Hariwell, George “Foggy Warning”, Article in Going Places, California Department of Transportation publication, Winter, 1993.

31. VanBerkel, John. Telephone interview, June 2, 1998.

32. “Changeable Message" Warning Signs In Dense Fog. California Highway Patrol, Analysis Section , Sacramento, CA. Intrm Report, May, 1977.

33. US Department of Transportation. “Traffic Control Systems Handbook” FHWA-IP-85-11, Chapter 5 Detectors and Chapter 8 Communications. April 1985.

34. California Business, Transportation & Housing Agency, Department of Transportation. “Specifications For Changeable Message Sign Systems”, Chapter 2. Available from Caltrans Division of Traffic Operations, 1120 N Street, Sacramento, CA 95814, January 1992.

35. Pouliot, Stephen G., and Wilson, Eugene M. “Motorist Information Needs and Changeable Sign Messages for Adverse Winter Travel.” Presented at Improving Rural Transportation Through Advanced Transportation Technology, conducted by Caltrans and US Dept of Transportation FHWA, Redding, California, September 28-29, 1992.

36. Qualimetrics Inc. (now All-Weather Systems) “Systems Catalog and Product Information”. Qualimetrics Inc. 1165 National Drive, Sacramento, CA 95834, 1997.

37. Hauer, E. “Observational Before-After Studies in Roadway Safety,” Elsevier Science, Ltd., Pergamon Press, 1997. pp.18-25 (on definition of traffic safety).

38. U.S. Dept. of Transportation, Office of Traffic Management and IVHS, "Intelligent Vehicle Highway Systems Operational Test Evaluation Guidelines." DOT Document HTV-20, Prepared by the Mitre Corporation under contract to the U.S. DOT IVHS Operational Tests Division, November, 1993.

39. Organisation for Economic Co-operation and Development, “Methods for Evaluating Road Safety Measures,” OECD, 2, rue Andre-Pascal, 75775 Paris, CEDEX 16, France 1981.

40. National Cooperative Highway Research Program (NCHRP), “Statistical Methods in Highway Safety Analysis,” Transportation Research Board, National Research Council, National Academies Press, Washington DC, 2001.

41. Hauer, E., “Statistical safety modeling,” Transportation Research Record 1897, National Academies Press, Washington, D.C., pp. 81-87, 2004.

42 University of South Florida. *Evaluation of Motorist Warning Systems for Fog-Related Incidents in the Tampa Bay Area*. Center for Urban Transportation Research College of Engineering, 1997.

43. Turner, P.A. and M. Pietrzyk. Getting Clear of Fog-Related Crashes in the Tampa Bay Area. *ITE Journal*. Institute of Traffic Engineers, February 2000, pp 26 – 31.

44. Traffic Accident Surveillance and Analysis System (TASAS) Table B. The TASAS database is operated by the California Department of Transportation and the California Highway Patrol. Information online at http://www.dot.ca.gov/hq/traffops/signtech/signdel/chp3/chap3.htm#3-04.

45. Evans, L. “Traffic Safety and the Driver,” Van Nostrand Reinhold, New York, 1991. Chap. 11 “User Responses to Changes in Traffic Systems.”

46. Hakkert, A.S., Mahalel, D. “The effect of traffic signals on road accidents – with particular reference to the introduction of a blinking green phase,” Traffic Engineering and Control, 19(5) pp. 212-215, 1978.

47. Noland, R.B. “Traffic fatalities and injuries: the effect of changes in infrastructure and other trends,” Accident Analysis and Prevention, No. 35 pp 599-611, 2003.

1.16 Appendix

1.16.1 Related reports, publications and presentations on companying CD:

Preliminary evaluation system design presentation, District 10, 1998

Project status presentation, District 10, 1002.

CAWS Evaluation Technical Update for Caltrans District 10, November 2, 2000

Caltrans HQ briefing, 2003

Caltrans/CHP Fog Forum, 2003

CAWS Evaluation Technical Update for Caltrans District 10, April 4, 2003

National Visibility Conference Presentation, Madison Wisconsin, 2003

Survey of fog warning and variable speed limit systems worldwide, Caltrans/CHP Fog Forum, 2001

CAWS Evaluation overview, Caltrans/CHP Fog Forum, 2001

"Methods and Metrics of Evaluation of an Automated Real-time Driver Warning System," TRB 05-1423, presented at Transportation Research Board annual meeting, January, 2005.

1.16.2 Bibliography – Additional Published Information on Similar Highway Fog Warning Systems

1.16.3 Verification of Completion of Contractual Tasks based on Contract Schedule A: Project Description (OTS-38b)

1.16.2 Bibliography – Additional Published Information on Similar Highway Fog Warning Systems

In addition to the literature citations in the five volumes of this report, the following bibliographic references may be of some value for the further information of the reader of this report. Each contains the abstract if it was available. The citations were accumulated early in the project, and may not necessarily represent the most recently available information. The list is not comprehensive, but is representative. Cited foreign language papers were limited to only those with English abstracts of sufficient detail to provide useful information on a particular project. Publications are categorized by the location of the project, plus a general class for other technology-based papers of direct relevance. In addition to these resources, extensive information is available via the World Wide Web on individual products and traffic warning projects. Excerpts from selected references appear in the Appendix.

1.16.2.1 Projects in USA

Arkansas

Highway Accident Report: Multiple Vehicle Collision With Fire During Fog Near Milepost 118 On Interstate 40, Menifee, Arkansas, January 9, 1995 And Special Investigation Of Collision Warning Technology

Source: National Transportation Safety Board, 800 Independence Avenue, SW, Federal Office Building 10A, Washington, DC, 20594
Report Number: NTSB/HAR-95/03,;Notation 6530A 105p
Publication Year: 1995
Language: English
Abstract: On January 9, 1995, a multiple-vehicle rear-end collision occurred during localized fog on Interstate 40 near Menifee, Arkansas. The accident about 1:50 a.m. near milepost 118 eventually involved eight loaded truck tractor semitrailer combinations and one light-duty van. Four drivers and a co-driver were killed, one driver sustained a minor injury, and four drivers were uninjured. The safety issues discussed in this report include collision warning technology use during low visibility driving conditions, the emergency channel 9 override feature for citizens band radios, and the non-uniformity in State laws governing four-way emergency hazard flasher operation. As a result of its investigation, the Safety Board issued safety recommendations to the Secretary of Transportation; the National Highway Traffic Safety Administration; the Federal Communications Commission; the 50 States, the District of Columbia, the Commonwealth of Puerto Rico, the Virgin Islands, and the Territories; the Telecommunications Industry Association; the Intelligent Transportation Society of America; and the American Association of Motor Vehicle Administrators.

California

“Changeable Message" Warning Signs In Dense Fog

Source: California Highway Patrol, P.O. Box 898, Analysis Section, Sacramento, CA, 95804
Via: National Safety Council, Safety Research Info Service, Intrm Report.
Publication Year: 1977
Language: English
Abstract: The California Highway patrol (CHP) and the Department of Transportation (Caltrans) cooperated in the Fog Sign Study to determine the usefulness of "changeable message" warning signs in dense fog. The study was conducted in Stockton Area on SR 99 south of Stockton and in Riverside

Area on SR 91 near Corona. The time period for the study was December 1, 1976, through March 31, 1977. Five warning signs (48" x 48") with telescoping stand and strobe light were assigned to each Area. Two cloth changeable messages were used: "DENSE FOG AHEAD" and "WRECK AHEAD". These messages were attached to a basic sign by means of Velcro fasteners and could be easily changed to meet operational needs. The signs were collapsible so they could fit in the trunk of the patrol car. When there was an accident in light to heavy fog, the CHP patrol unit put up the warning sign with the message, "WRECK AHEAD". To prevent potential chain reaction accidents, the other warning sign with the message "DENSE FOG AHEAD" was put up whenever there was a fog bank ahead of 200 feet or less visibility. The intent of the study was to determine what effect the warning signs ("DENSE FOG AHEAD" and "WRECK AHEAD") hand on vehicle speed. Also, the practicality and the usefulness of the signs were to be determined through comments made by CHP Officers. Objective analysis could not be made because of lack of data. Speed surveys were not conducted, and only eight "Warning Sign Evaluation Forms" were completed. It is recommended that the usefulness and effectiveness of these fog signs be restudied during the 1977 fog season with improvements.

Changeable Message Warning Signs In Dense Fog: Interim Report December 1, 1976 - March 31, 1977

Source: California Highway Patrol, Sacramento, CA,
Supplemental notes: California Highway Patrol, analysis section other phys.
Publication Year: 1977
Language: English
Data Source: UC, Berkeley, Institute for Transportation Studies
Abstract: No abstract.

Detectors for Automatic Fog-warning Signs

Author: Juergens, W. R.
Source: California. Division of highways. Sacramento.
Final report sponsored by the California Dept. of Transportation.
Research report No. CA-dDOT-tr-1115-1-73-02.
Publication year: 1973
Language: English
Data source: UC, Berkeley, Institute for Transportation Studies
Abstract: no abstract provided.

Florida

Evaluation Of Motorist Warning Systems For Fog-Related Incidents In The Tampa Bay Area

Author: Pietrzyk, MC; Turner, PA; Geahr, SL; Apparaju, R
Source: Center for Urban Transportation Research, University of South Florida, 4202 East Fowler Avenue, Tampa, FL, 33620, and Florida Department of Transportation, 605 Suwannee Street, Tallahassee, FL, 32399-0450
Report Number: ESC-DOT-96/97-7007-TO
Publication Year: 1997
Language: English
Abstract: A four-month investigation was conducted to determine (1) the extent of unique and recurring patterns of fog and fog-related incidents in the Tampa Bay area (defined as Hillsborough and Pinellas counties) and (2) suitable countermeasures to detect and warn motorists of fog conditions. The results of this investigation are summarized as follows: The Tampa Bay area typically has about 22 "heavy fog" days annually when visibility is 1/4 mi (0.4 km) or less. Comparatively, the foggiest location in the U.S. is located at Cape Disappointment, Washington, with 106 heavy fog days per year. Fog tends to form on clear, cool nights when moist air accumulates just above the ground or water. Light winds mix this shallow air to form condensation, which dissipates as the sun rises. This

condition generally tends to occur between December and February in the Tampa Bay area. However, fog prediction is difficult because of the variability in density, location, development and dissipation rates, and area of coverage at a given point in time. Only the typical "fog season" can be identified. Between 1987 and 1995, 829 fog-related crashes were reported in the Tampa Bay area and 6,323 statewide. This represents 0.30% and 0.32% of the total reported crashes in Tampa Bay and the state, respectively. Crash report sites have been scattered throughout the Tampa Bay area, and thus, historically, there have been no particular fog-prone crash locations. Over the last decade, Hillsborough County has had a fog crash rate somewhat above the state average, while Pinellas County's fog crash rate has been well below the state's average. Hillsborough County has never been ranked higher than 16th, and Pinellas County has not ranked higher than 47th among all 67 Florida counties over this same period of time. Those drivers who are most likely to be involved in fog-related crashes in the Tampa Bay area are residents of the county where the crash occurs, driving passenger cars, age 20-29, driving during the a.m. commute hours and traveling on local and county roads in rural locations. About 12 states have been formally engaged in detection and warning system evaluation related to fog, and several have invested $2-$4 million for integrated visibility/weather and motorist warning systems. However, the benefits for deployment of such systems have not been documented. Even though a recurring theme in all fog crash evaluations conducted by the states and National Transportation Safety Board recommends the development of a driver awareness campaign (to assure driver behavior is uniform in times of limited visibility), only California has followed through in this endeavor. This report recommends and describes a focused driver awareness campaign as the most cost-effective measure to reduce fog-related crashes, since the Tampa Bay area exhibits no particular fog-prone or fog-crash-prone areas. This awareness campaign should share information related to the fog season, fog crash history, and driving tips in fog.

Georgia

Fog Detection and Warning System

Published on web site: www.dot.state.ga.us/homeoffs/fpmr.www/admin/research/fog.html
Source: Georgia Dept. of Transportation, Research and Development Division
Publication Year: 1999
Language: English

Abstract: One of Research and Development's most innovative contributions has been the installation of a Fog Detection Warning System on a heavily-traveled portion of Interstate 75 in South Georgia. The system, developed jointly by GDOT and the Georgia Tech Research Institute, could serve as a prototype for automated visibility monitoring programs in other states where fog, snow or dust can pose hazards for motorists. Using a network of 19 sensors, 5 sets of traffic speed monitoring loops, weather instruments and an on-site central computer, the system will continuously monitor visibility and control four variable message signs along a 12 mile section of highway in an area where dense fog is known to develop. When the system detects a visibility problem, it will automatically notify authorities by telephone and post information on the variable message signs. The signs, in turn, will warn drivers of the specific hazard, call for reduced traffic speeds when appropriate, and provide detour information if necessary. Messages are changed automatically, by the system, or on-site by an official. A dial-up system provides law enforcement and highway officials with remote access to the information gathered by the system. Using computer terminals, these officials will be able to monitor visibility levels, traffic speeds, and weather conditions. The fog warning system uses commercially available optical fog sensors, each of which contains a light source and a receiver which are aligned at a slight angle to each other. Under good conditions, the beam of light produced by the source will miss the receiver; however, the presence of fog particles will scatter the beam and reflect light back into the receiver. The receiver then measures the amount of light it is receiving and calculates the extent of visibility impairment. The study phase of this project is expected to provide such basic information as how often fog occurs, how severe visibility problems can become, and how widespread the problems can be. The study also includes measured traffic speeds during various fog conditions and a comparison of the visibility sensor readings with human observations. This information will be used to design the operational system.

North Carolina

North Carolina Experimental Evaluation Project 170-3(5) Fog Detection and Warning Device

Author: Strong, MP
Source: North Carolina Department of Transportation, Planning and Research Branch, P.O. Box 25201, Raleigh, NC, 27611
Final Report
Publication Year: 1985
Language: English
Bibliographic/Data Appendices: 1 App.
Abstract: The performance of the experimental fog detection and advisory speed warning system was observed during a ten year period of operation. During this period, limited problems were experienced with the power supply modules in the sign system, with the drive motor and roller mechanisms in the sign scrolls, and with integrated circuit logic systems within the sign units. The highway accident experience decreased when this fog detection and advisory speed warning system was converted to a dual remote control and direct control mode of operation.

Oregon

Variable Message Fog Hazard Warning Signs To Control Vehicle Operating Characteristics

Source: Oregon Department of Transportation, State Highway Division, Salem , OR, 97310
Sponsored by FHWA.
Publication Year: 1972
Language: English
Data Source: National Safety Council, Safety Research Info Serv
Abstract: This project is aimed at determining the effectiveness of variable message signs in controlling traffic on an Interstate highway during periods of hazardous driving conditions such as fog, vehicle accidents or congestion. The effectiveness of the signs is being measured quantitatively by use of accident records, vehicular speeds, and headways. Insufficient data preclude drawing quantitative conclusions; however, based on data available, interviews with the State Police, and visual observation of vehicular operations, it appears that the signs are effective in controlling traffic operations and thereby preventing accidents during periods of reduced visibility due to fog.

Fog Warning Sign System

Author: George, L.E.
Source: ITTE, California University, Berkeley, /Proc, 2nd Ann Symposium, pp 23-24
Publication Date: Dec. 1969
Language: English
Abstract: A six-mile section of interstate 5 in Oregon located in the Willamette River valley, was found to be extremely susceptible to radiation type fog forming conditions during certain periods of the year. The conditions which bring about radiation fog are discussed. in early 1968, an extremely vicious chain reaction accident precipitated a series of investigations and studies involving operating conditions on this portion of the freeway as well as possible corrective measures. The general accident pattern in six years preceding 1966, at which time a warning sign system was installed, consisted of a total of 13 accidents involving 129 vehicles. Seven fatalities and 73 injuries were sustained. Orange, diamond-shape warning signs with battery-operated flashing lights fixed to the top of the post were installed in 1966. These signs were manually operated by state patrol men. Since manual sign activation was too slow, the use was obtained of a remote telemeter control for six signs from the Albany office of the state police. Twenty-four hour radio contact between police mobile units on the freeway and the Albany office is used as an early warning system on which decisions are based to activate the signs if there is indications of a critical fog. A research program is being developed to measure the effect of these signs on the traffic stream operation.

Variable Message Fog Hazard Warning Signs to Control Vehicle Operating Characteristics

Final rept. Nov 68-Jun 79
George, L. E. ; Hofstetter, D. K. ; Wagner, D. R.
Source: Oregon Dept. of Transportation, Salem. Traffic Engineering Section.
Sponsor: Federal Highway Administration, Salem, OR. Oregon Div.
Report Number: 79/3; FHWA/OR-79/3. See also report dated Apr 72, PB-210 205.
Publication Date: June 1979
Language: English
Abstract: The objective of the research project was to determine the effectiveness of a variable message fog warning sign system on a 6.5 mile fog prone section of Interstate 5 in Oregon. Prior to installing this variable message sign system in 1968, an intensive literature search was conducted to determine the optimum signing system for our needs. It was determined that prior experience with this type of system had not been adequately documented. Therefore, the 'Oregon Design' was developed, and this study conducted to determine the system's effectiveness. The primary finding of this study was that the 'Oregon Design' variable message fog warning sign system has been effective in reducing the number of fog related accidents on this section of highway.

Variable Message Fog Hazard Warning Signs to Control Vehicle Operating Characteristics.

Source: Oregon State Highway Div., Interstate 5 - North Albany
Report Number: 5149-602-08 Contract Number: DOT-FHWA-41L4014; HPR-1(6)
Publication Date: April 1972
Abstract: The project is aimed at determining the effectiveness of variable message signs in controlling traffic on an Interstate highway during periods of hazardous driving conditions such as fog, vehicle accidents, or congestion. The effectiveness of the signs is measured quantitatively by use of accident records, vehicular speeds, and headways. It appears that the signs are promising in preventing accidents during periods of reduced visibility due to fog.

Tennessee

Fog Warning System Provides A Safety Net For Motorists

Author: Dahlinger, D; McCombs, B
Source: Public Works Journal Corporation, 200 South Broad Street, Ridgewood , NJ, 07451
Journal of Public Works Vol: 126 Issue Number: 13, pp 36-37 ISSN: 00333840
Publication Date: December 1995
Language: English
Abstract: Motorists on Interstate 75 in southeastern Tennessee now have the benefit of a fog detection/warning system to keep them apprised of adverse highway conditions. The warning system monitors conditions along a three-mile highway section that has a history of severe fogging events. These conditions have resulted in several severe reduced visibility related crashes. The most recent crash involved a total of 99 vehicles in December 1990, which resulted in 12 fatalities and 42 injuries. The project was developed by a Tennessee Department of Transportation committee of public safety, traffic operations, design, construction, and maintenance, and Federal Highway Administration representatives.

Virginia

Fog Warning System To Be Installed On Virginia's Highway System At Critical Locations

Source: Journal of American Highways Vol 50, No 4, P 15

Publication Date: Oct 1971
Language: English
Abstract: The first fog warning equipment on Virginia's state highway system will be installed at two locations on interstate 64 in 1971. The detector on the sensing device, which was designed in Germany, consists basically of a lamp and a light-sensitive tube with screens between them. Fog particles in the atmosphere scatter toward the photocell some of the light that passes under the screens that prevent a direct light-to-tube route. The Elizabeth river bridge installation involves both fog and ice warnings. Two air and moisture sensors are used for the ice detector. One of the two is heated to retain unfrozen moisture, through which a current is conducted. When the second sensor freezes, the current is cut off, and this activates the message to the ice and speed signs. The speed limit sign can be turned on manually also, and therefore can be used with either the ice or fog warnings, or with both. The Elizabeth River bridge installation will be made at a cost of $68,735

1.16.2.2 Foreign Projects

England

Assessment Of M25 Automatic Fog-Warning System - Final Report

Author: Cooper, Br; Sawyer, HE
Source: Transport Research Laboratory, Old Wokingham Road, Crowthorne , Berkshire, Rg11 6au, United Kingdom, TRL Project Report, Issue Number: PR 16, IRRD Document Number: 858269
Publication Year: 1993
Language: English
Abstract: An automatic fog warning system, designed by Traffic Control and Communications Division of the Department of Transport, became operational during the summer of 1990 on the M25 London orbital motorway. TRL were asked to assess the effectiveness of the system, primarily in terms of any changes in vehicle speeds which occurred when the signals were switched on as a result of the formation of fog. This report on the assessment describes briefly the automatic warning system, the method of data collection and analysis and also presents detailed results. There is an overall net reduction in mean vehicle speeds, of about 1.8 mph when the signals are switched on based on data from 6 test sites. Rather greater speed reductions occur in lanes 2 and 3 and lesser ones in lane 1. Increases in speed occur when the signals are switched off. Faster vehicles slow down more; it is estimated that the 85th percentile speed (i.e. the speed exceeded b y only the fastest 15 percent of vehicles) falls by about 0.5 mph more than the reduction in the mean when the signals are switched on. However, the potential of the automatic fog warning system to reduce drivers' speeds is perhaps illustrated by the greatest average speed reduction at a single test site of approximately 5 mph (recorded in lane 3). These speed reductions indicate that drivers are alerted to the presence of fog ahead which coupled to the greater credibility associated with an automatic system, means that drivers are likely t o respond more quickly to the hazard itself. In addition operational benefits would be expected to accrue to the police. Control office staff are notified of the presence of fog, but are relieved of the difficult task of operating motorway signals in response to fog whose density and location is likely to be continuously changing. Furthermore, the mimic signal display in the control office will tell the police which signals are showing the 'fog' legend and therefore where the fog is.

Germany

Evaluation of an Automatic Fog-Warning System.
Author: Hogema, Jeroen H. et. al.
Source: Journal of Traffic Engineering & Control, pp. 629-632; Includes bibliographical references, Vol. 37, no. 11 Publication Date: Nov.1996
Language: English
Data source: UC, Berkeley, Institute for Transportation Studies
Abstract: No abstract.

Fog Warning: A Step Towards Automation In Accident Prevention

Author: Michaelis, E.E.
Source: Journal: Roads & Road Construction, London, UK, Vol 49, No 588, pp. 430-431
Publication Date: December 1971
Language: English
Abstract: Fog warning systems so far installed in Britain have proved of limited value because motorists have found the arrangements under which these are switched on to be unreliable. The light obscuration caused by fog at British airports is measured at three points along the runways using special transmissometers. The ambient light is also measured using a background luminance monitor. The transmissometer is not only highly accurate initially by maintains its accuracy over a long period of time without requiring constant cleaning. Special housing insures that the instrument will remain operative under the most severe weather conditions. The transmissometer has been used with dramatic reduction of accidents on the Aachen-Cologne autobahn near a plant producing a severe and localized fog.

Netherlands

The Dutch Fog-Detection And Warning Project

Author: Remeijn, H.
Affiliation: Ministry of Transport, Netherlands
Publisher: IEE , London, UK
Sixth International Conference on Road Traffic Monitoring and Control p. 89-93 ISBN: 0 85296 545 1
Publication Date: 28-30 April 1992.
Language: English
Abstract: Holland has known a number of severe motorway-accidents caused by fog. These accidents have occurred on various places in the motorway network, but some roads have been plagued more than others. The A16-motorway, the link between Rotterdam and Belgium, is more or less famous for its fog accidents. In the beginning of 1991 the Ministry of Transport decided that a fog-detection and warning-system should be installed at the A16 near Breda, and that this system would serve as a pilot project for possible later installations. The system design of this pilot is presented. The control equipment is located at a service site near Breda. All outstations are connected to the control equipment via a set of party-lines; the visibility-sensors use wires in the same cable. A mini-computer is used to collect the visibility-data, to control the outstations along the road and to communicate with a number of PC's via modems. One PC (for system supervision) is situated in the control room of the Drechttunnel, because this location is manned 24 hours a day. Another PC is used by the KNMI to collect meteorological research data. A (hot) standby computer is foreseen but not operational yet.

Dutch Fog-Detection and -Warning Project.

Author: Remeijn, H.
Source: Ministry of Transport, Holland
IEE Conference Publication N 355, Michael Faraday House, Stevenage, Engl. P 89-93.
Publication Year: 1992
Language: English
Abstract: In response to a number of severe highway accidents caused by fog, the Ministry of Transport in Holland installed a fog-detection and warning-system on the A16 near Breda. Drawing on the experience of similar systems around Europe, project managers decided that the system should project a maximum speed limit under bad visibility conditions. In addition, the speed used can vary from 100 km/h to 20 km/h, with speeds lower than 60 km/h not having much effect. This paper describes the system and its integration into the Motorway Control and Signaling System.

Evaluation of an experimental fog detection and warning System on the A16 (Evaluatie Proefistdetectie- En Waarschuwingssysteem Op De A16)

Author: Stoop, J
Source: Technische Universiteit Delft, Vakgroep Veiligheidskunde, Kanaalweg 2b, Delft, 2628 Eb, Netherlands.
Publication Year: 1994
Language: Dutch
IRRD Document Number: 875909
Data Source: Transport Research Laboratory (TRL)
Abstract: An accident analysis has been made after the installation of an fog warning and fog detection system on the A16 motorway. Complicated accidents have not occurred after the installation and the number of other accidents have decreased, in particular the rear-end collisions. Other kinds of accidents during fog can be decreased as far as the lower speed adds to the prevention of skidding due to a slippery road. Besides the installation of the fog warning and fog detection system eventual side effects have been studied such as coupling with the Automatic Incident Detection System and the installation of another street lighting.

Spain

Automatic Fog Warning System

Author: Winstanley, J.V.
Affiliation: Plessey Systems Technol., Chessington, UK
Journal: Mundo Electronico (Spain), No.58 p. 39-44
Publication Date: Dec. 1976
Language: Spanish
Abstract: Fog on high-speed motorways can be a deadly and expensive menace. The article outlines an automatic system of fog detection and gauging to allow appropriate accident preventive action to be taken. Two separate optical sensors gauge the visibility level: a point visibility meter measures the fog density as a light scattering function, and a back-ground light meter simulates the sensitivity of the human eye to prevailing lighting conditions. The combined signals are transmitted to a control room for analysis and display/alarm.

1.16.2.3 General Fog Warning Systems, Devices, and Driver Behavior Studies

Ice and Fog: Detection and Warning Systems. (Latest citations from the NTIS Database)

Source: National Technical Information Service, Springfield, VA. NERAC, Inc., Tolland, CT.
Publication Date: July 1993
Language: English
Bibliography: Contains citations concerning detection methods and warning systems for sea ice, aircraft ice, bridge ice, and fog formation. Remote aerial sensing and ground based detection systems are among the methods discussed. (Contains 250 citations and includes a subject term index and title list.)

Ice and Fog: Detection and Warning Systems (Citations from the NTIS Data Base)

A series of reports covering 4-year intervals from 1964-Feb 94.
Author/Editor: Habercom, G. E.
Source: National Technical Information Service, Springfield, VA.
Publication Date: March 1980
Language: English
Abstract: Sea ice, aircraft ice, bridge ice, and fog formation detecting methods are reviewed in these

Government-sponsored research reports. Remote aerial sensing and ground based detection systems are among the methods investigated. (This updated bibliography contains 177 abstracts, 15 of which are new entries to the previous edition.)

Fog Collision-Avoidance Warning Device

Author: de Bruyne, P.
Proceedings IEEE 31st Annual 1997 International Carnahan Conference on Security Technology, Canberra, ACT, Australia, pp. 168-71 ISBN: 0 7803 3913 4
Publisher: IEEE , New York, NY, USA
Conference Date: 15-17 Oct. 1997
Language: English
Abstract: The introduction of 4-way flasher hazard warning switches in cars has helped a great deal in reducing collision pile-up accidents. However, in dense fog this system is inadequate, despite the use of bright rear light fog lights, recommended when vision is less than 150 ft. Low cost car theft alarm actuators operate in the 430 MHz frequency range and have an action radius of about 300 ft. A 430 MHz transceiver in cars coupled to the 4-way flasher control switch could be used. When this switch is on, that is the flasher is working, the transmitter is active within a radius of about 300 ft. When the switch is off, the normal position, the transceiver is in the receive mode. The first cars to approach a hazard will normally actuate their 4-way flashers, thus transmitting the danger signal to cars behind them. The received signal will cause the indicator switch of the 4-way hazard flashing control to flash, or provide some other warning, thus notifying the following cars of a possible hazard ahead.

Behavioural Effects of Signal Changes in the Fog-Warning Function of Motorway Signalling

Authors: Hogema, JH; Van Nifterick, W
Source: Ertico, Rue de la Regence 61, Brussels, 1000, Belgium
ITS America, 400 Virginia Avenue SW, Washington DC, 20024-2730
Journal: Mobility for Everyone. 4th World Congress on Intelligent Transport Systems, 21-24 October 1997, Berlin, paper no. 2396
Publication Year: 1997
Language: English
Abstract: A driving simulator study was conducted to study the behavioural effects of signal changes of a fog signalling system. Fog signalling is an automatic system which in case of fog shows a speed limit to passing drivers that is adjusted to the visibility conditions. The signals as perceived by drivers may change in space (being confronted with different messages on subsequent signs) or in time (seeing a message change from one state to another while passing a sign). In the experiment, subjects drove in a simulated motorway environment with several fog scenarios, both with and without a fog warning system. The experiment consisted of two parts, dealing with signal changes in space and in time, respectively. This paper summarises the effects on free-driving speed found in both parts.

Automatic Fog Warning.

Author: Winstanley, J. V.
Corporate Source: Plessey Radar, Cowes, Engl
Source: Systems Technology No. 22 Oct 1975 p 26-31
Publication Year: 1975
Language: English
Abstract: This article outlines an automatic system of fog detection and gaging to allow appropriate accident prevention steps to be taken. Two separate optical sensors gage the visibility level: a point visibility meter measures the fog density as a light scattering function, and a background light meter simulates the sensitivity of the human eye to prevailing lighting conditions. The combined signals are transmitted to a control room for analysis and display/alarm.

Fog warning. A step towards automation in accident prevention.

Author: Michaelis, E. E.
Source: Roads and Road Construction v 49 n 588 Dec 1971, pp. 430-431
Publication Year: 1971
Language: English
Abstract: Features of a special transmissometer developed by Sick Optik-Elektronik of Munich, West Germany in which the light from a single source is split into two light beams which are made to pass through holes in a rotating disk so that the light is modulated to two different frequencies, and light of the one frequency is made to cross the distance over which the measurement is to be made, while the light from the other beam is used for comparison purposes.

Fog Warning Devices for Highway Traffic. (NEBELWARNGERAETE FUER DEN STRASSENVERKEHR.)

Authors: Fruengel, F.; Gelbke, E.
Source: Impulsphys, Hamburg, Ger., Strassenverkehrstechnik V 18 N 5 p 156-165. ISSN: 0039-2219
Publication Date: Sept-Oct 1974
Language: German
Abstract: The measurement of visibility in fog, with the purpose of switching on warning traffic signals, requires visibility measuring instruments which are clearly different from those used at airports and weather stations. The requirements with regard to fog warning devices for road traffic are set forth. Among them are: the warning threshold distance of from 80 to 150 m visibility, a continuous recording of the measured visibility value, and low electric power requirements. Measurements by means of a transmissometer and a videograph are described. The effects are summed up. Visibility distances of dimmed lights, of the main beam, or rear light in conditions of bright fog, twilight, or at night can be read out from the tables presented.

Tech Brief – Highway Fog Warning System

FHWA Publication No. FHWA-RD-99-110, April 1999. Available on-line at
http://www.itsdocs.fhwa.dot.gov//JPODOCS/PERIODIC//76M01!.PDF

California-Oregon Advanced Transportation Systems (COATS) Showcase Projects

Abstract: The Showcase effort is a multi-year, rurally focused research project that seeks to provide information that may improve the performance of existing intelligent transportation systems (ITS) elements, and to provide data to justify, support or direct future deployment of ITS in northern California and southern Oregon (see Figure 1). Showcase consists of multiple independent evaluation activities that exist to support the goals, objectives and desired benefits established for ITS planning and deployment in the rural California/Oregon Advanced Transportation Systems (COATS) project (see Tables 1 and 2). Showcase evaluations are performed by the Western Transportation Institute (WTI) at Montana State University-Bozeman. The purpose of this document is to provide a summary of current evaluation activities that are funded under the Showcase project. It provides a status update on active evaluations, highlighting recent activities completed under each evaluation, and identifying future research directions. It also gives the status on inactive evaluations, to document previous deliverable and when future activity (if any) may be expected

1.16.3 Verification of Completion of Contractual Tasks based on Contract Schedule A: Project Description (OTS-38b)

From Office of Traffic Safety SCHEDULE A, PROJECT NO: RS0034

Specific Project Tasks by Phase (modified for delayed start of contract to 7/1/00):

Phase 1 – Program Preparation (7/1/00 - 6/30/01)

1.1 Work with D10 on system access. This initial phase will be devoted to developing and implementing appropriate mechanisms for fully automated collection of data at two field sites located on Southbound Interstate 5, at Caltrans-designated sites French Camp Slough and County Hospital. Work begins by working out final arrangements with District 10 and Caltrans Operations personnel for access to equipment, communications, and archived data required for evaluation. The objective of this preliminary effort will be to have fully autonomous data collection in operation prior to the 2000-2001 fog season, which traditionally extends from October through March.

This task was completed 12/31/2001, although the process was ongoing for the duration of the project.

1.2 Monitoring software design and implementation. As required for Task 1.3, below, software will be developed to facilitate monitoring, remote access, secure communications, and autonomous operation of equipment installed at field sites and in the TMC in District 10.

This phase was completed 6/30/2002.

1.3 Setup of data collection, communications and processing equipment. Several technical alternatives have been identified for achieving this objective. Final details and decisions will be made in cooperation with Caltrans technical personnel, especially with the system designers. The proposed workplan herein follows the mechanization suggested by Caltrans District and technical personnel in meetings conducted during September-October 1999. A separate data collection and communications server will be set up in the District 10 Traffic Management Center for the exclusive purpose of comminuting with and acquiring data from the three existing systems that operationally comprise the CAWS. These systems are designated by Caltrans as the Signview Computer, the Qualimetrics/Caltrans Meteorological System, and the Traffic Monitoring Computer. The server will also provide archiving and preliminary data reduction functions, and provide a mechanism for remote FTP download of data to the evaluation team facilities for processing.

This task was completed 630/2002

Phase 1 Deliverables: Quarter report describing Phase 1 technical activities.

Delivered.

Phase 2 – Implementation (9/1/00 - 6/30/02)

2.1 Completion of instrumentation, communications, and system integration at the French Camp Slough and County Hospital field sites. The proposed budget includes provisions for subcontract work by Qualimetrics required for completion of the French Camp installation, inclusion of this tenth site into the software running on the Meteorological System computer, and communications hardware and software modifications required to permit data access by the server computer.

This phase has been completed 9/1/2002 per original requirements, with addition of two field acquisition sites in 2003.

2.2 Set up remote CCTV monitoring of visibility and traffic conditions. The evaluation team will install a remote CCTV camera and compressed video telecommunications system at one site, to be selected in cooperation with District 10. CCTV site installation work will be performed by a subcontractor to be selected, subject to Caltrans approval. Within the field of view of this camera will be at least one weather monitoring station (preferably the County Hospital station), and a set of five visibility test targets at selected distances from the camera. The video feed from this camera will be accessible to the District TMC as well as the evaluators from their San Luis Obispo Laboratory. Since the video feed will be carried (securely) over the Internet, it will also be accessible, with password access, to any other Caltrans office or any authorized research institution. The visibility reference targets will be approximately the same as those deployed in the earlier 1973 "Operation Fogbound" study performed in District 10. If desired by Caltrans, the video feed may also be made accessible to the public via the District 10 / CAWS web site.

This task was completed 9/1/2002.

2.3 Set up remote system access. The evaluation team will set up dedicated full-time Internet connectivity in the District 10 TMC to facilitate remote access to the evaluation server for data access and remote control. This capability will also permit public access to a District 10 CAWS Web site, to be described in Task 2.4, below. A service contract will be let to an Internet Access/Service Provider (ISP).

This task was modified since it was not possible to gain access to the CAWS computes in the District 10 TMC. These design and deployment of a distributed data acquisition at five filed sites in addition a central database server replaced this task. Work was completed 3/1/2002 but continuous improvements were made over the course of the evaluation project.

2.4 Set up District 10 / CAWS Web site. At the discretion of Caltrans and the OTS, the evaluation team will also assist Caltrans District 10 in making the public and transportation community aware of the CAWS by creating and maintaining an Internet Web site for the District, with hyperlinked information access for all aspects of the system, its performance and history. If technically feasible, a real-time mechanism for display on the Web site of immediate traffic, visibility and hazard information may be implemented. This may serve as a public aid for trip planning and routing, with some potential benefit in improved safety and reduced traffic congestion.

This task was completed 6/30/2003, although the support for this server continued for the remainder of the project.

Phase 2 Deliverables: Completed field instrumentation. CCTV installation at a selected location in CAWS study area. Internet-based remote network access service, linking evaluation laboratory with District 10 TMC. CAWS web page and links. Quarter Report describing Phase 2 activities and accomplishments.

All delivered, as documented in final report.

Phase 3 – Real-time Data Collection and Analysis (1/1/01-6/30/02)

3.1 Operation, maintenance and field service. To assure continuous operation of all evaluation-related components, we will work with District personnel to assure proper operation and maintenance of all field instrumentation and the server and it's communications interfaces in the District 10 Traffic Management Center (TMC).

This ongoing task was completed at contract termination 6/30/2005.

3.2 Data collection, archiving, processing, and interpretation. The evaluation team will be responsible for collection, archiving, reduction, processing and interpretation of all data generated by the installed instruments, as well as data sets generated by the CAWS itself. A research assistant will be placed on site in the District 10 TMC to handle all manual data collection tasks and assist district personnel with system operation and maintenance. Caltrans technical cooperation will be required for interpretation of the system's

several data encoding strategies and protocols. All data reduction, processing and interpretation will be performed by the evaluation team in San Luis Obispo.

The ongoing task was completed at contract termination 6/30/2005.

Phase 3 Deliverables: Technical support for field instrumentation installed by evaluation team. Quarter report(s) describing data collection activities and reporting preliminary results, observations and limitations.

CAWS evaluation system with full documentation was delivered to Caltrans District 10 on 5/24/2005. All ongoing support tasks were completed at contract termination 6/30/2005.

Phase 4 – Archival Data Collection and Analysis (10/1/00 - 6/30/02)

4.1 Assess operational issues. While no further study of operational issues is planned, the evaluators will observe the operation of the CAWS system over the evaluation period, and inspect maintenance and service records to identify any obvious or potential areas of unreliability or serviceability problems. In cooperation with Caltrans technical personnel, remedial actions may be suggested.

This ongoing task was completed at contract termination 6/30/2005.

4.2 Crash data statistical analysis. The evaluation team will reactivate previous efforts to acquire and analyze long-term traffic crash data via the TASIS data base and District ten collisions records. Archived statistics 1971-96 on vehicle crashes, including reported causal factors, traffic and atmospheric conditions, number of vehicles involved, severity and fatality rate, will be obtained (to the extent available) for the study area with the cooperation of Caltrans and the NHTSA. External influences, such as improvements in vehicle and highway technologies, changes in traffic patterns and volumes, or differences in weather patterns will be identified, and efforts will be made to study their possible influences upon the statistical conclusions. The objectives of this task are not only to establish before-and-after statistical loss trends, but to better relate driver behavior to the measurable data obtained from field sensors (e.g., speed distribution and headway distribution). This also affords an opportunity to identify potentially correlated phenomena via Multivariate Analysis of Variance (MANOVA), which has been used previously in the 1991-94 evaluation of a similar Fog Warning system in the Netherlands.

This task was completed with the delivery of the final report.

Phase 4 Deliverables: Statistical analysis of archived and current traffic incident data, as described above. Quarter Report discussing operational issues, if any, as described above.

The phase was completed with the delivery of the final report.

Phase 5 – Long-term Monitoring Infrastructure (4/1/02 - 10/1/02)

5.1 Long-term data collection system design. Following the limited evaluation period, the evaluation team will attempt to leave in place in the District an autonomous system for continued data collection, archiving and processing. This will facilitate the eventual generation of conclusions based upon long-term data and observations, for future analysis and study.

This task was completed 6/30/2005.

5.2 Configure system for autonomous operation. The system and long-term data collection procedures designed in the preceding task will be configured, activated and debugged to the extent possible within practical constraints and resource limits.

This task was completed with the activation of the CAWS Evaluation System 9/1/2001. Continuous improvements were made over the remaining duration of the project.

Phase 5 Deliverables: Design and installation of means (to be determined in consultation with Caltrans) for permanent automated means for data collection, archiving and processing. Quarter Report describing Phase 5 activities and accomplishments.

The phase was completed with the handoff of the CAWS Evaluation System to Caltrans 5/24/2005.

Phase 6 – Reports and Dissemination of Results (10/1/00 - 6/30/03)

6.1 Quarter reports. The project coordinator will prepare and submit all project reports in accordance with OTS requirements specified with the Grant Program Manual Chapter 7.

All quarter reports delivered on due dates.

6.2 Publication of methodologies and results. One or more technical papers covering various aspects of the project evaluation will be authored with Caltrans and OTS co-authors, for publication in one or more appropriate technical forums.

Publication of TRB journal paper 2005, Caltrans Fog Forum Presentations 2001 and 2002, and National Visibility Conference presentation 2004.

6.3, 6.4 Final report preparation. The project coordinator will prepare and submit a comprehensive final project report in accordance with OTS requirements specified with the Grant Program Manual Chapter 7.

Final report (5 volumes) delivered.

Phase 6 Deliverables: Final comprehensive evaluation report. One review and revision cycle. Publication of results, consistent with Caltrans policies.

All deliverables complete except for agency review of final report.