THE THREE-LINE MAGNETIC HYPERFINE SPECTRUM OF ^{57}Fe

Norman A. BLUM
Applied Physics Laboratory, Johns Hopkins University, Laurel, MD 20723, USA

and

Richard B. FRANKEL
Department of Physics, California Polytechnic State University, San Luis Obispo, CA 93407, USA

Longitudinal magnetization of a ^{57}Co in iron metal foil source and an iron metal foil absorber in a uniform external magnetic field results in a simple three-line magnetic hyperfine absorption spectrum. Measurement of the spectral splitting as a function of applied magnetic field yields the ^{57}Fe excited- and ground-state g-factors.

In their landmark paper on hyperfine interactions in Mössbauer spectra, *Polarized Spectra and Hyperfine Structure in ^{57}Fe*, Hanna et al. [1] used ^{57}Co diffused into an iron metal foil as a source of 14.4 keV radiation and an iron metal foil as the absorber. The source and absorber foils were either unmagnetized, or magnetized in the plane of the foils by small permanent magnets. In the latter case, the magnetization directions of the source and absorber foils were either parallel or perpendicular to each other, but were always perpendicular to the gamm-ray transmission direction (transverse polarization). Thus, the ^{57}Fe hyperfine magnetix fields in the source and absorber foils were either unaligned, or aligned parallel or perpendicular to each other, and the gamma-ray radiation was either unpolarized or linearly polarized. These experimental situations resulted in as many as eleven resolved lines in the Mössbauer spectrum [1]. We should note that even in the unmagnetized case, the iron domains tend to lie in the plane of the foils, perpendicular to the gamma-ray direction, but have no preferred magnetization direction in the plane.

One case not covered in the Hanna et al. paper [1] is where both source and absorber iron foils are magnetized parallel to each other, and parallel to the gamma-ray transmission direction (longitudinal polarization). As noted by Frauenfelder [2], this is more difficult to achieve experimentally because of the large demagnetizing field of 21.8 kOe in a thin iron metal foil magnetized perpendicular to the plane of the foil. In practice, external magnetic fields of the order of 30 kOe are required to overcome the demagnetizing field and to rotate the iron domains perpendicular to the foils [3]. This situation results in a simple three-line spectrum [3,4] (fig. 1) with theoretical relative intensities 3 : 10 : 3. The origin of the spectrum is sketched in fig. 2 [3]. If the source and absorber were not both iron metal and had different hyperfine fields, a more complex spectrum with up to eight lines would have been obtained [4] (see fig. 3).

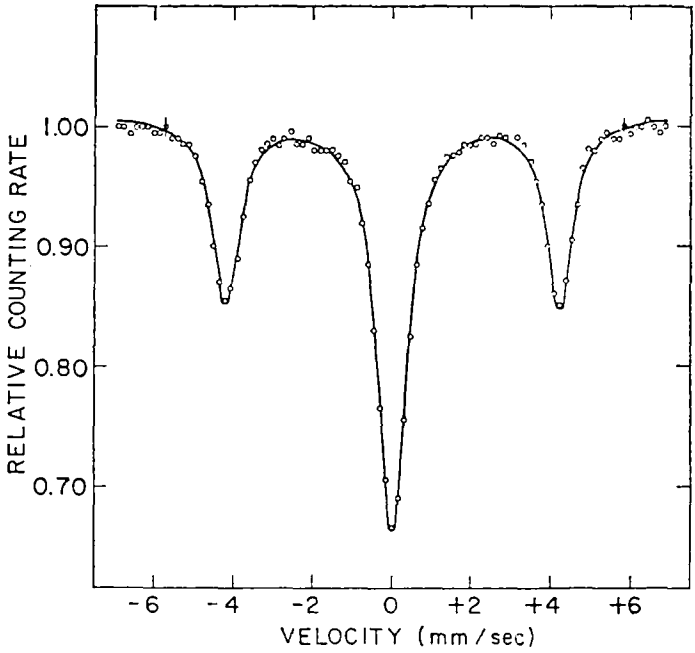

Fig. 1. Experimental absorption spectrum for a source of ^{57}Co in an iro metal foil and an iron metal foil absorber, both situated in a 133 kOe external magnetic field (from [3]).

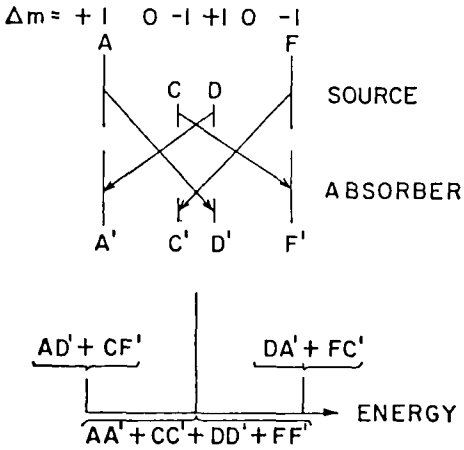

Fig. 2. Absorption spectrum stick diagram for collinear, longitudinal magnetic fields at the nucleus H_n with the same intensity and sign in source and absorber. Resonances occur when a source transition overlaps an absorber transition with the same value of Δm. Three lines result as shown, with the most intense line at zero velocity. Transitions B and E of the six-line source spectrum are not observed in longitudinal polarization.

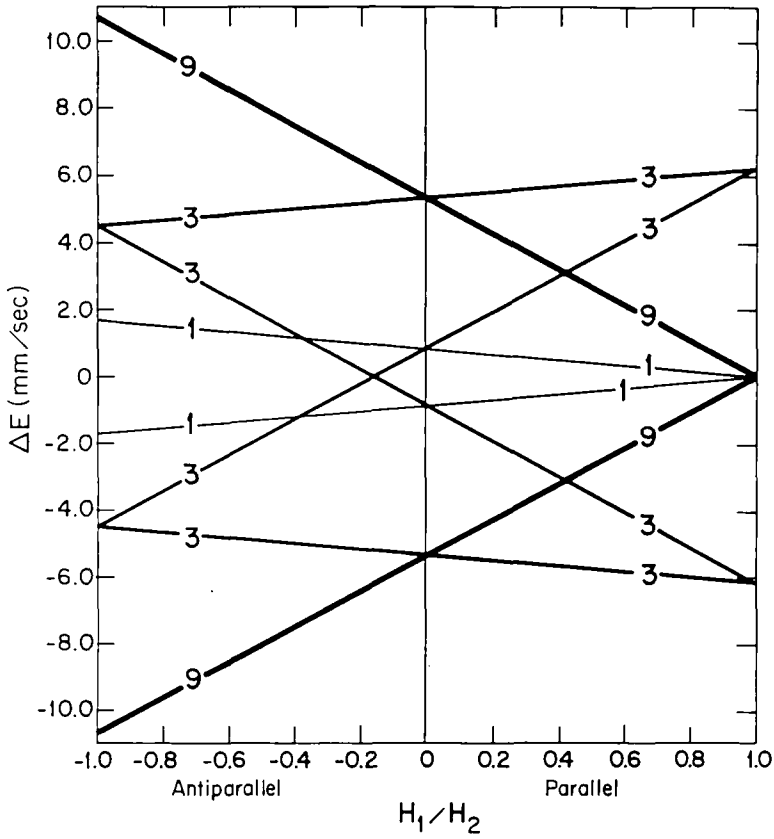

Fig. 3. Correlation diagram showing the line positions of an absorption spectrum for collinear, longitudinal magnetic fields as a function of the ratio of the magnetic field intensities at the nucleus in source and absorber H_1 and H_2, respectively. The vertical axis is scaled for $H_2 = 331$ kOe From [4]). Negative ratios correspond to magnetic fields at the nucleus of opposite sign in source and absorber.

As discussed by Foner et al. [3], the three-line specturm can be used to determine the magnetic hyperfine field at the nucleus and the ^{57}Fe 14.4 keV excited state and ground state g-factors g_1 and g_0 if one measures the splitting of the outer lines as a function of applied magnetic field. The total magnetic field at the nucleus is given by

$$H_n = v\{E_0/2(g_0 + g_1)\mu_N c\}, \tag{1}$$

where E_0 is 14.4 keV, μ_N is the nuclear magneton, c is the velocity of light, and v is the splitting in velocity units between the outer lines of the spectrum. If v is measured in mm/s, $H_n = 26.7v$ kOe. H_n is a sum of several terms, including the magnetic hyperfine field H_{hf},

$$H_n = H_{hf} + H_{DM} - H_0, \tag{2}$$

where H_{DM} is the demagnetizing field (21.8 kOe) and H_0 is the applied magnetic field. From eq. (1), we can write

$$dv/dH_0 = -2(g_1 + g_0)\mu_N(c/E_0)[1 - dH_{DM}/dH_0]. \tag{3}$$

For applied magnetic fields above 30 kOe, $dH_{DM}/dH_0 = 0$. Thus, Foner et al. [3] used measurements of v at values of H_0 between 30 and 133 kOe to give $g_1 + g_0 = 0.281 \pm 0.003$. From the usual six-line spectrum of iron metal with a single-line source, $g_0/g_1 = 1.750 \pm 0.004$ [5]. Thus, $g_0 = 0.179 \pm 0.002$, giving $\mu_0 = 0.0894 \pm 0.0001\ \mu_N$, which is consistent with the value of $0.09024 \pm 0.00007\ \mu_N$ obtained by electron-nuclear double resonance measurements [6].

Acknowledgements

This work was performed at the MIT Bitter National Magnet Laboratory. We thank L. Grodzins, A.J. Freeman and S. Foner for their support and contributions to this work.

References

[1] S.S. Hanna, J. Heberle, C. Littlejohn, G.J. Perlow, R.S. Preston and D.H. Vincent, Phys. Rev. Lett. 4(1960)177.
[2] H. Frauenfelder, *The Mössbauer Effect* (Benjamin, New York, 1962), p. 74.
[3] S. Foner, A.J. Freeman, N.A. Blum, R.B. Frankel, E.J. McNiff, Jr. and H.C. Praddaude, Phys. Rev. 181(1969)863.
[4] N.A. Blum and L. Grodzins, Phys. Rev. A136(1964)133.
[5] R.S. Preston, S.S. Hanna and J. Heberle, Phys. Rev. 128(1962)2207.
[6] P.R. Locher and S. Geshwind, Phys. Rev. A139(1965)991.