A 100-kHz - 22-GHz INSTRUMENTATION PHOTORECEIVER

D.J. Derickson, C.M. Miller, R.L. Van Tuyl

Hewlett-Packard Co. Signal Analysis Division
Rohnert Park, Ca 94928

ABSTRACT

A photoreceiver consisting of a high speed PIN photodetector, and a 100-kHz to 22-GHz distributed amplifier is described. Photoreceiver calibration is accomplished by optical heterodyne techniques. The photoreceiver is used with a microwave spectrum analyzer to acheive -65-dBm (optical) sensitivity at 1300-nm and 1550-nm wavelengths.

SUMMARY

Microwave spectrum analyzers can make useful measurements of intensity-modulated light, simultaneously displaying signal and noise for both linear and pulse modulations. In the design of a photoreceiver front end for a microwave spectrum analyzer, three major problems are typically encountered:

1). Unamplified photodetectors can cover the spectrum analyzer bandwidth but suffer from limited sensitivity due to the spectrum analyzer's high noise figure.

2). Photodetectors with amplifiers have good sensitivity but generally do not cover the entire spectrum analyzer frequency range.

3). Lack of measurement standards for modulated light makes frequency response calibration difficult.

Figure 1 illustrates an optical receiver which addresses these problems. Light from a single mode optical fiber is passed through an anti-reflection coated glass plate for low reflection and is collimated with an apochromatic lens. A motor-driven optical attenuator can be used to prevent receiver overload. The light is then focused onto a 25-um diameter, front-illuminated, InP/InGaAs/InP photodetector (1). The photodiode responds to 1200-nm - 1600-nm wavelength light with high responsivity due to the anti-reflection coating used on the diode. The photodiode is mounted physically close to the amplifier to prevent multiple ripples in the passband response caused by the photodetector's poor source match. A microwave preamplifier with 100-kHz - 22-GHz bandwidth, 31-dB nominal gain, 50-ohm port impedances, and 7-dB nominal noise figure boosts the signal for delivery to the spectrum analyzer.

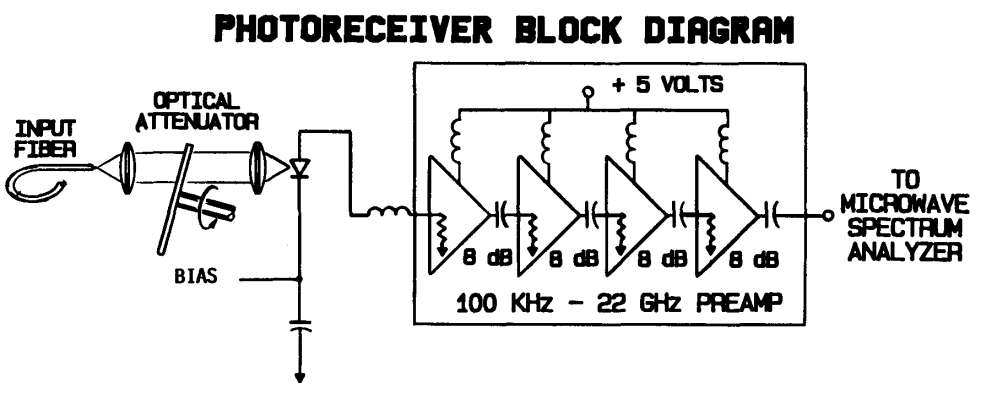

Figure 1. The optical receiver system: Fiber input, optical attenuator, front-illuminated InP/GaInAs/InP PIN photodetector, microwave preamplifier and microwave spectrum analyzer.

0149-645X/88/0000-1063$01.00 © 1988 IEEE

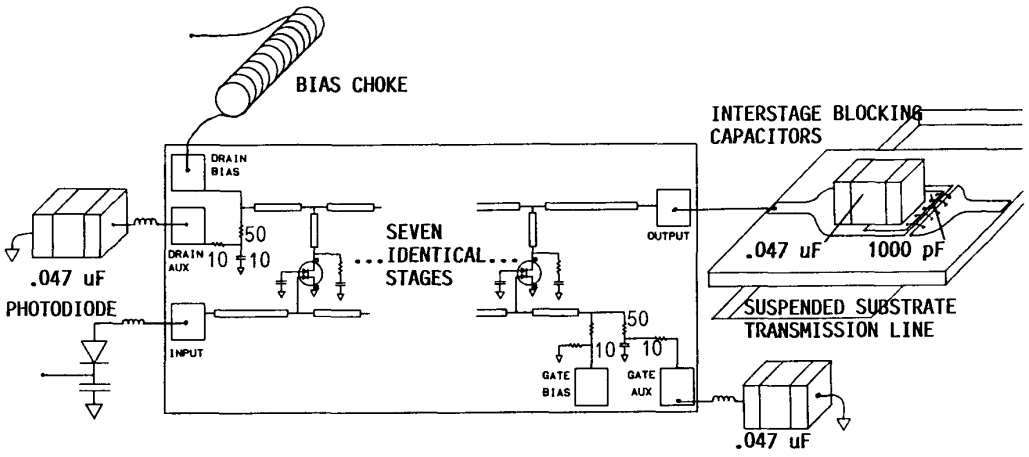

Figure 2. Single stage amplifier detail: Bias choke, external bypass capacitors and the interstage blocking capacitors for the MMIC chip.

BANDWIDTH AND SENSITIVITY

The microwave amplifier is the key to achieving good sensitivity without reducing the system's bandwidth. It consists of four microwave monolithic distributed amplifiers (2) that have their low-frequency corner extended down to 100 kHz. Typical gain and noise figure performance for the cascade is shown in figure 3. Details of a single stage of the amplifier (figure 2) show how the good low and high frequency performance of the amplifier is accomplished. The drain and gate artificial transmission lines are externally bypassed with .047-uF ceramic capacitors. A 10-ohm resistor is used to prevent parallel resonance between the 10-pF on-chip bypass capacitor and the inductance of the bond wire connecting to the external bypass capacitor. The amplifier's bias is fed into the reverse termination end of the drain line through a bias choke. This feed point has the advantage of less sensitivity to bias choke shunting impedances. The bias choke is constructed by close-winding insulated, gold plated copper wire around a high-magnetic-loss cylindrical core. Interstage coupling is through a 1000-pF integrated thin-film circuit capacitor in parallel with a .047-uF ceramic capacitor. The integrated capacitor has good microwave performance and the large ceramic capacitor is mounted on a short suspended-substrate transmission line segment to reduce its parasitic capacitance to ground.

Figure 4 shows the frequency response of the combined photodector and amplifier. Overall frequency response roll off at 22 GHz for the optical receiver circuit is 6.5 dB (optical) of which 4 dB is from the amplifier and 2.5 dB is from the photodiode. System sensitivity of -65 dBm (optical) is acheived in a 10-Hz resolution bandwidth.

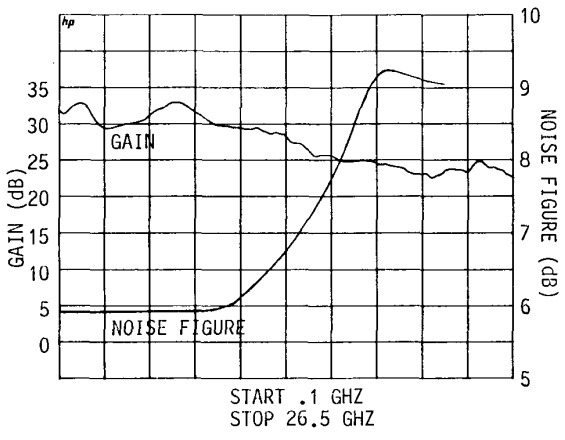

Figure 3. Gain and noise figure for the 4 stage amplifier cascade over the 100-MHz to 22-GHz frequency range.

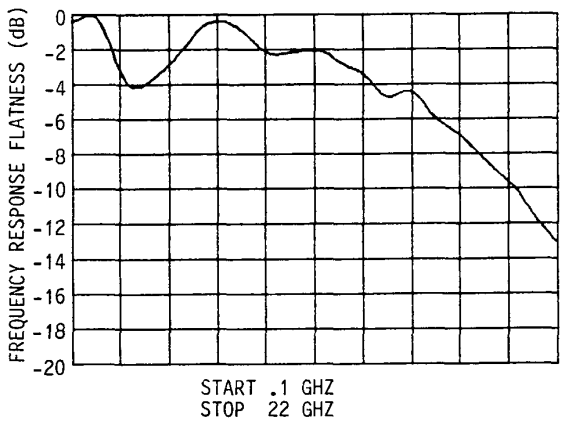

Figure 4. Frequency response flatness: The response of the photodetector and the amplifier combined.

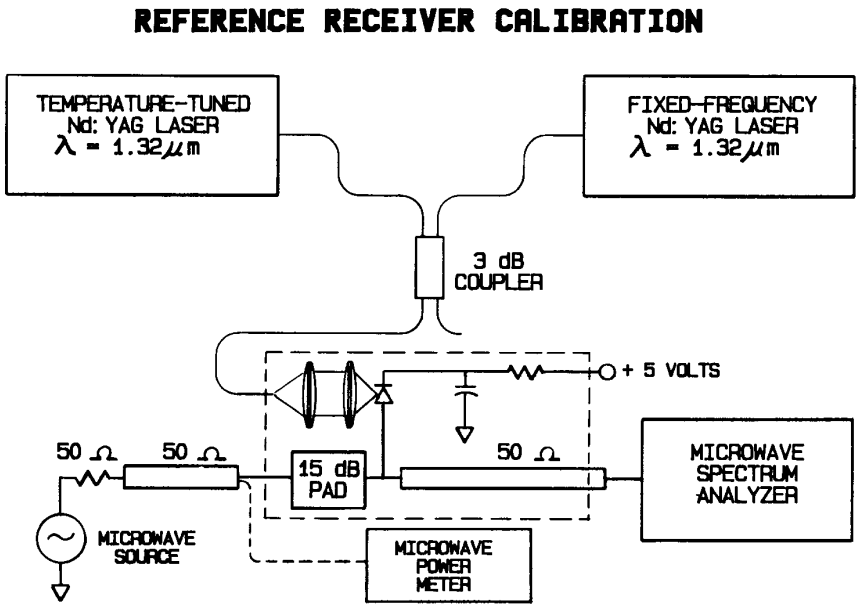

Figure 5. Reference receiver calibration method: Electrical frequency response errors in the fixture and spectrum analyzer are first calibrated. Then, constant amplitude modulated light derived from optical heterodyne interaction of two Nd:YAG lasers calibrates the detector.

FREQUENCY RESPONSE CALIBRATION

The photoreceiver system of Fig. 1 is calibrated by comparing its response at 250 frequency points to that of a reference receiver. The reference receiver (figure 5) is calibrated as follows:

1). All sources of electrical frequency response error due to detector capacitance, mismatch loss, and cable loss, as well as spectrum analyzer amplitude errors, are measured by feeding a power-meter-calibrated microwave signal through the fixture and into a spectrum analyzer.

2). The frequency response of the reference detector's photocurrent is then calibrated by turning off the microwave signal and injecting a constant amplitude modulated optical signal whose modulation frequency is determined by heterodyne interaction (3,5) of two quasi-planar-ring, diode-pumped Nd:YAG lasers (4), one of which is temperature tuned over a 22-GHz range.

After the reference receiver is calibrated, it is used to calibrate other receiver systems. To calibrate a system, a gain-switched diode laser's output is measured with the reference receiver. The calibrated laser response is then used to measure the system under test.

SYSTEM PERFORMANCE

A calibrated lightwave signal analyzer (HP71400A) consisting of the photoreceiver and a microwave spectrum analyzer measures average power, modulation and noise of intensity modulated sources from 100 kHz to 22 GHz. The photoreceiver's amplifier has sufficient gain so that the system's noise figure is determined by the amplifier and not by the spectrum analyzer. The noise equivalent power versus frequency of the system is shown in figure 6. The output of a sinusoidally modulated laser is shown in figure 7, illustrating harmonic distortion and intensity noise measurements. Frequency response rolloff of the detector manifests itself as noise floor rise versus frequency in this calibrated display. Amplifier frequency response unflatness has been corrected so that the displayed signal rolloff is accurate.

CONCLUSION

A fully amplitude-calibrated 22-GHz bandwidth lightwave signal analyzer system for displaying intensity-modulated light with -65-dBm (optical) sensitivity has been developed. An optical heterodyne calibration method which reduces the sources of electrical error was employed.

REFERENCES

1). S.Y. Wang, K. Carey, B. Kolner, "A Front-Side Illuminated InP/GaInAs/InP p-i-n Photodiode...", IEEE Trans. Elect. Dev., ED-34, pg. 938, 1987

2). J. Orr, "A Stable 2-26.5 GHz Two-Stage Dual-Gate Distributed MMIC amplifier", IEEE-MTT-S International Microwave Symp. Dig., HH-4 pg. 817, 1986

3). B.M. Oliver, "Signal to Noise Ratios in Photoelectric Mixing", Proc. IRE, pg. 1960, 1961

4). W.R. Trutna Jr., D.K. Donald, M. Nazarathy, "Unidirectional Diode Laser-Pumped Nd:YAG Ring Laser...", Opt. Letters, v.12, pg. 248, 1987

5). E.R. Ehlers, et. al, "A comparison of Frequency Response Calibration Techniques for Wide Bandwidth Photodetectors", 1988 OFC Technical Digest, pg. 119, 1988

ACKNOWLEDGEMENTS

The authors wish to acknowledge Z. Azary, D. Bailey, R. Koo, B. Lycette, A. Otani, B. St. Clair, D. Yanez, J. Yarnell and support from Jack Dupre.

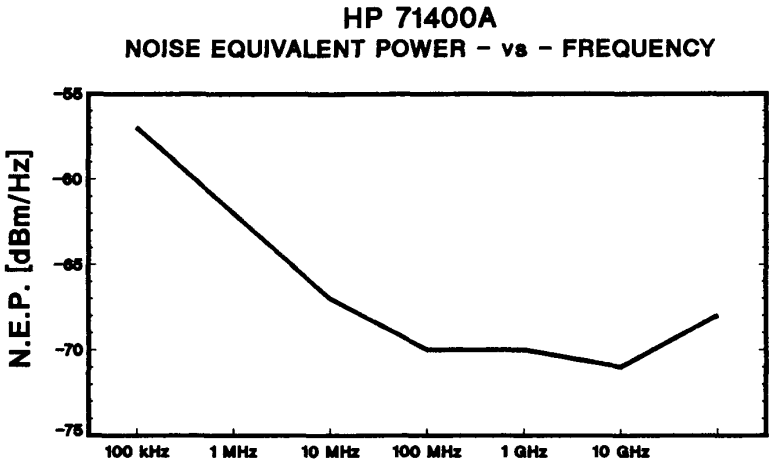

Figure 6. Noise equivalent power sensitivity of the lightwave signal analyzer.

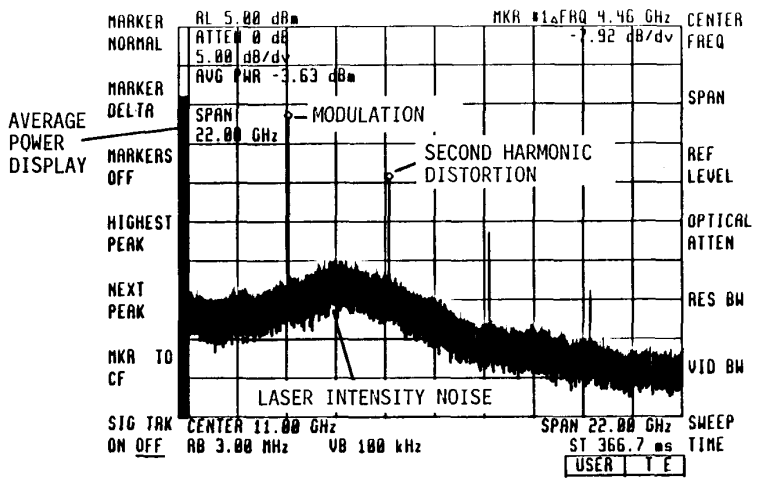

Figure 7. System Display:
Power spectrum of a laser diode linearly modulated at 4.46 GHz, showing average power, modulated power, harmonic distortion, and intensity noise.