Sick Laser Scanner Power Supply
For Use with a Yamaha RMAX UAV

Cal Poly Senior Project

By

Elliot Due

Senior Project

Electrical Engineering Department

California Polytechnic State University, San Luis Obispo

2011

Table of Contents

I.	Introduction	1
II.	Background	3
III.	Requirements	4
IV.	Design	5
V.	Development and Construction	7
VI.	Testing and Results	8
VII.	Conclusion	11
VIII.	Bibliography	12
IX.	Appendix A: Schematic	13
X.	Appendix B: PCB Artwork	14
XI.	Appendix C: Bill of Materials	16
XII.	Appendix D: Operational Instructions	17

List of Tables and Figures

Figure 1: Completed Circuit Board 7

Figure 2: No load output voltage ripple (approximately 200mV p-p) 9

Figure 3: Loaded output voltage ripple (approximately 328mV p-p) 9

Figure 4: Circuit schematic 13

Figure 5: Top layer PCB artwork 14

Figure 6: Bottom layer PCB artwork 15

Table 1: Bill of Materials 16

Acknowledgements

I'd like to thank Professor Slivovsky for bringing me onto this project. I was previously unaware of the entire program surrounding this incredible UAV. This project has greatly expanded my knowledge of not only power systems, but also of remote and autonomous flight. There are very few electrical engineers working on this project presently, and I am truly honored to have been asked to join the team.

I. Introduction

Alternator and generator based power systems pose interesting design requirements that are often difficult to overcome. This project is a key example of a power supply design that copes with these issues. Cal Poly's Yamaha RMAX helicopter has one of the aforementioned power systems. This is a very typical 24V automotive electrical power system. These systems are called 24V; however they do not typically sit at 24V DC, but near it. These typically measure a few volts higher than 24V at rest, and upwards of 28 volts when charging, depending on the specific system. This does not necessarily present an issue when a connected device requires an input voltage that is a number of volts higher or lower than this. However, occasionally a device that is running off of one of these 24V systems requires a consistent 24V.

Because of these fluctuations in supply voltage, if a connected device requires 24V, a power supply may be required to provide a voltage that is higher, lower, or the same as the one provided. That is exactly the case with the Yamaha RMAX and one of the desired system components, a SICK Laser scanner. The scanner requires 24V DC, and the helicopter is capable of providing a voltage that will fluctuate around that level. This creates many challenges, but luckily, technology has advanced to allow us to still make these things work together cooperatively.

My senior project deals with designing a power supply that can accept a wide range of input voltages with considerable ripple, and outputs a constant DC voltage with strict

ripple and voltage range constraints. This is going to be used to run a SICK laser scanner model LMS291 from the onboard electrical system of a Yamaha RMAX.

II. Background

My background in automotive style electrical systems is quite extensive. While this is not the electrical system on a car, it operates on the same principal. A battery is used in conjunction with an alternate power source, an alternator in this case, that both charges the battery and supplies current to the entire electrical system. The main function of the battery is to provide power to start the engine and power small systems when the engine is off.

The power supply for the scanner needs to be able to cope with the possible input voltages, as well as continue to function if there is an issue with the alternator onboard and the battery discharges significantly. Because of this it needs to work with input voltages both above, and below the target output.

III. Requirements

The requirements for the power supply are simple to understand. It requires 24V DC, and consumes 20 watts at maximum load. From ohms law we know that this means a maximum current draw of 20W/24V = .834 amps. In addition, there are three outputs capable of sourcing .6A total themselves. This creates a maximum load of 1.44 amps. Despite this calculation that I have done, the datasheet also notes a maximum current draw of 1.8 amps. To provide a safe margin, I imposed a 2 amp current requirement. Aside from the current requirements, the voltage must stay within +/- 15% of 24V, and have a maximum of 500mV of ripple. All of this was found in the datasheet for the LMS 200 series of laser scanners.

The power supply has to accept any likely voltage that it will receive from the helicopters power system. As discussed above, this may be a broad range. Due to this, I imposed a requirement to function over the voltage range of 14V-32V. This will allow for any overvoltage from the charging system, as well as allow the laser scanner to operate even if there is a major failure with regards to the helicopters electrical system.

Lastly, it is desirable to have the power source controllable via external means (microcontroller, computer, etc.). Due to this I imposed the requirement that the power supply be capable of being remotely enabled or disabled.

IV. Design

The most time consuming portion of the design of this power supply was trying to decide what IC to use, and along with that the topology. There are a number of different topologies that will accomplish my goals. I began looking at different offerings from a number of large IC manufacturers such as National Semiconductor, TI, Maxim, and Linear Technologies to name a few. Eventually, after weighing all of my options, I decided to use the LM5118 from National Semiconductor. This decision comes from the combination of excellent suitability of the IC to the desired functionality, availability, circuit complexity, and manufacturer support.

National Semiconductor provides a number of tools for designing with their products. The datasheet is excellent, providing a walkthrough for circuit design. In addition, they provide a spreadsheet that can calculate circuit component values based on your requirements. Finally, they provide their excellent WEBENCH online simulator for circuit simulation. These tools allow double and triple checking of hand done calculations, as well as simulation results to know that the proposed circuit will behave as expected.

Using the tools at my disposal, I first did an entire design by hand following along with the datasheet. Once I had completed this step, I used the excel spreadsheet calculator to verify my calculations, and finally simulated with the WEBENCH simulator. Once I confirmed my calculations would provide an appropriate system, I began to select components.

Parts selection was done following recommendations from the LM5118 datasheet, with special attention paid to input and output capacitors, inductor, mosfet, and diode selection. A desirable set of parameters is outlined for every component in the circuit, but these ones play a critical role in the power path. For every component, a suitable and high quality piece was selected as to provide a very stable and clean circuit.

The next design step was the PCB creation. Due to the high current capabilities, and noise issues common with switching power supplies I decided that a proper PCB should be manufactured rather than etch one myself. All schematic and PCB work was performed in Altium Designer. This excellent design suite made the process relatively painless. To design as successful a PCB as possible I used every layout hint provided in the LM5118 datasheet, as well as taking advice from the LM5118 evaluation board and corresponding application note. Once I completed the PCB design, I sent gerbers out to a board fabrication house to be made.

V. Development and Construction

Construction of the final product went extremely smoothly. It was comprised of nothing more than verification that the circuit boards were made exactly to spec, followed by soldering everything onto it. Soldering was significantly easier than I anticipated. Everything used is surface mount, and the IC is a very fine pitched package. Overall, the process went extremely smoothly, and no problems were encountered. Below is an image of the completed circuit board.

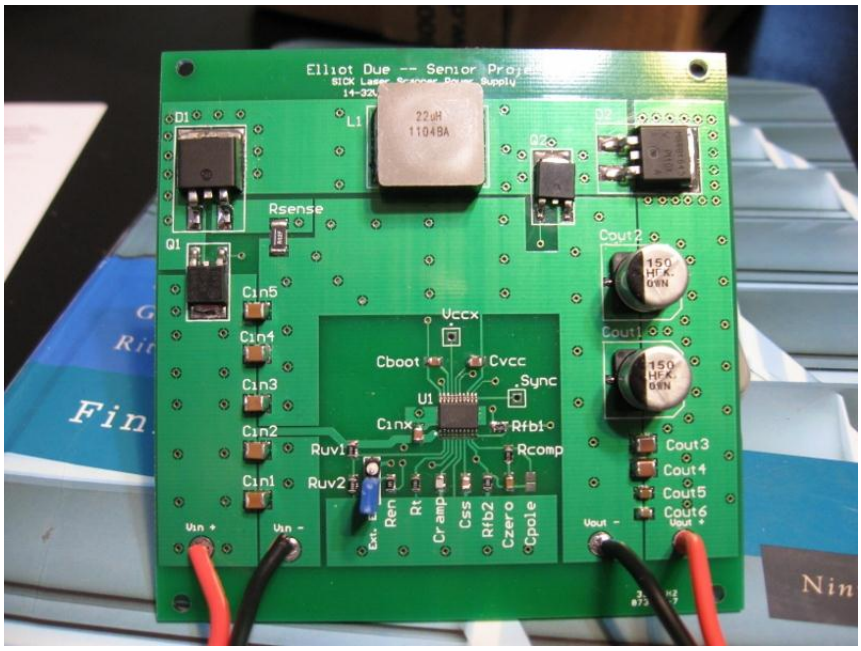

Figure 1. Completed circuit board

VI. Testing and Results

Testing for this project has also been very straight forward. As an initial test of my project I placed the external enable jumper into the position to disable the power supply. I then slowly applied and increased the voltage at the input from 0 to 32V and ensured that it did not output anything. My next test was to enable the power supply and perform the same voltage sweep with no load except for a multimeter and an oscilloscope. Once the input voltage reached 12.5V, the output turned on and measured 24.26V. Over the entire functioning range up to over 32V there was less than 10mV of voltage deviation. In addition, I used the oscilloscope to measure peak voltage ripple to be approximately 700mV.

The next test I conducted was a full load test. In order to measure full load performance I connected a variable resistive load and slowly decreased its resistance until 2 amps were being drawn. At this point I again measured the variation of the output voltage with the input voltage, with a deviation of less than 100mV. In addition, from no load to full load condition also created a voltage deviation of less than 100mV. Finally, I measured the ripple to be approximately 1Vp-p.

Clearly, these results are excellent with the exception of the output ripple. In order to combat this I started experimenting with added output capacitance and using a choke on the output and input to reduce switching noise. After much testing I finally found a solution of adding an input and output choke to greatly reduce high frequency switching noise. With these additions, the output ripple is greatly reduced to approximately 200mV without a load, and less than 400mV under load.

Below are oscilloscope screen captures of the final voltage output showing output ripple.

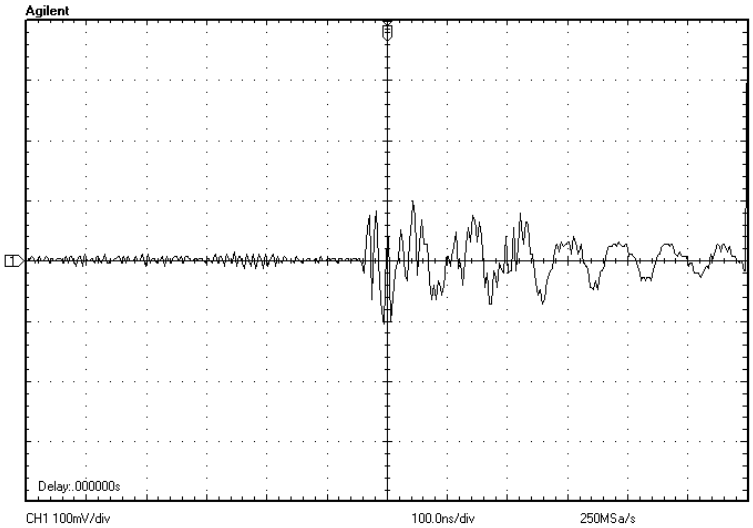

Figure 2. No load output voltage ripple (approximately 200mV p-p)

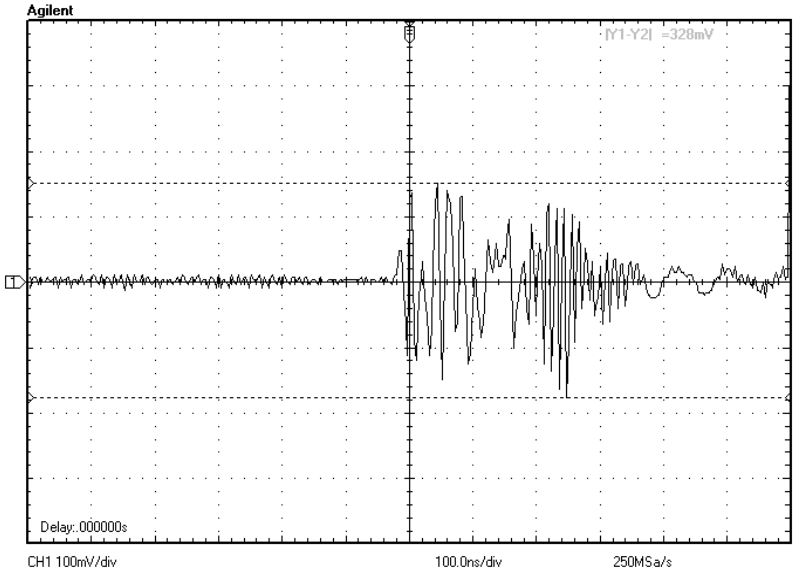

Figure 3. Loaded output voltage ripple (approximately 328mV p-p)

With these results, the power supply completely meets the guidelines laid out in the requirements section.

VII. Conclusion

Overall I am extremely happy with the outcome of this project. I am not only happy with the physical outcome, but also with the knowledge that I gained through the process. Power electronics is not one of my elective topics that I have taken courses in. This project allowed me to broaden my knowledge in Electrical Engineering. I am also happy to have worked on this project. A Yamaha RMAX, or any UAV for that matter, is not something that many people come across in their lifetime, let alone their college career. It has truly been a pleasure to work on this project, and I am proud that my contribution will fill the requirements that were outlined.

VIII. Bibliography

1.) National Semiconductor Datasheet for LM5118. 2010. National Semiconductor. 20 Dec. 2010 <http://www.national.com/profile/snip.cgi/openDS=LM5118>

2.) National Semiconductor Application Note for LM5118 Evaluation Board. 2008. National Semiconductor. 20 Dec. 2010 < http://www.national.com/an/AN/AN-1819.pdf>

3.) National Semiconductor Component Calculator for LM5118. National Semiconductor. 1 Apr. 2011 < http://www.national.com/assets/en/tools/LM5118_Calculator.xls >

4.) SICK Sensor Intelligence Datasheet for LMS291 Laser Scanner. 2006. SICK Sensor Intelligence. 11 Feb. 2011 <http://sicktoolbox.sourceforge.net/docs/sick-lms-technical-description.pdf>

Appendix A - Circuit Schematic

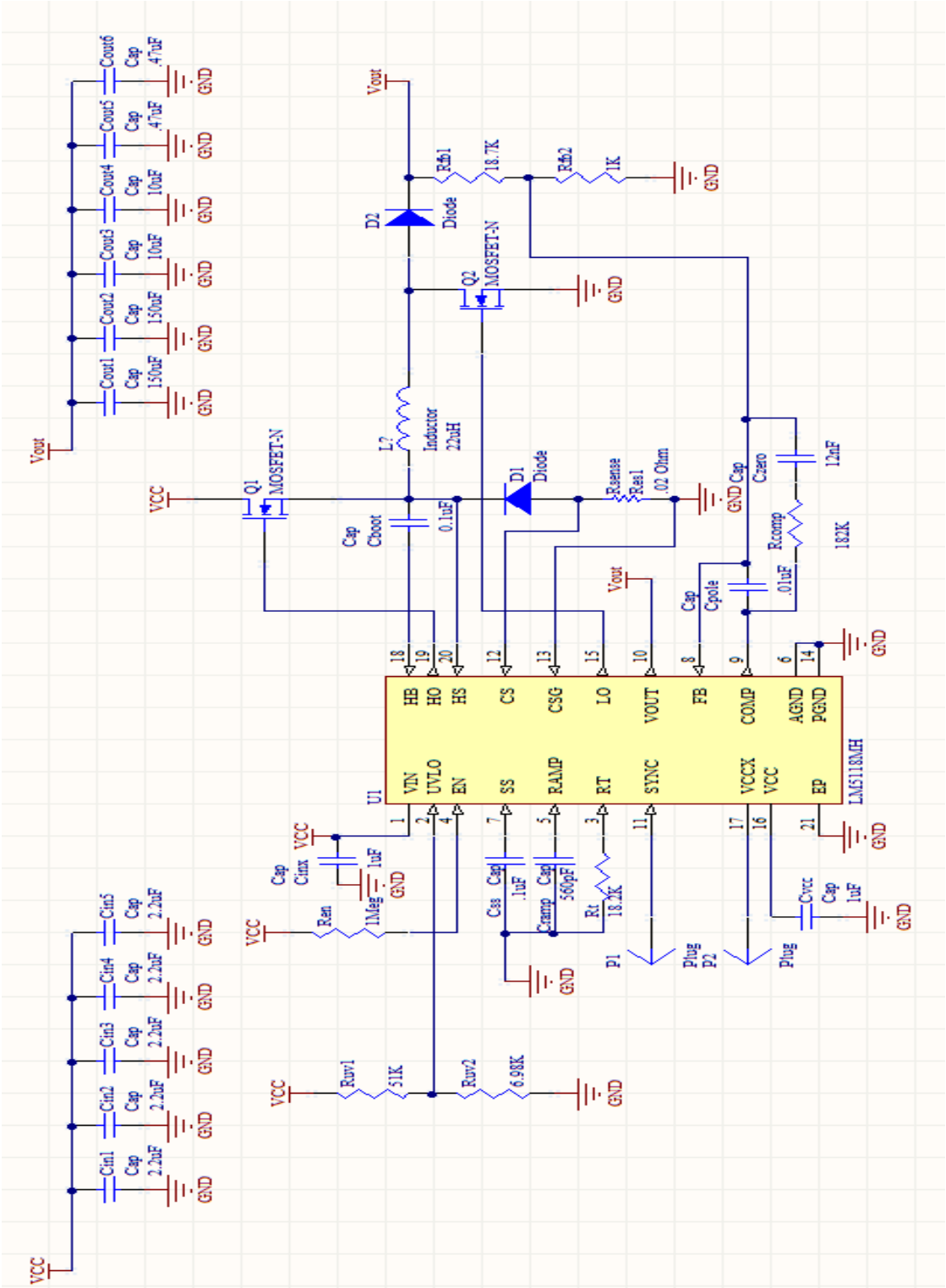

Figure 4. Circuit Schematic

Appendix B - PCB Artwork

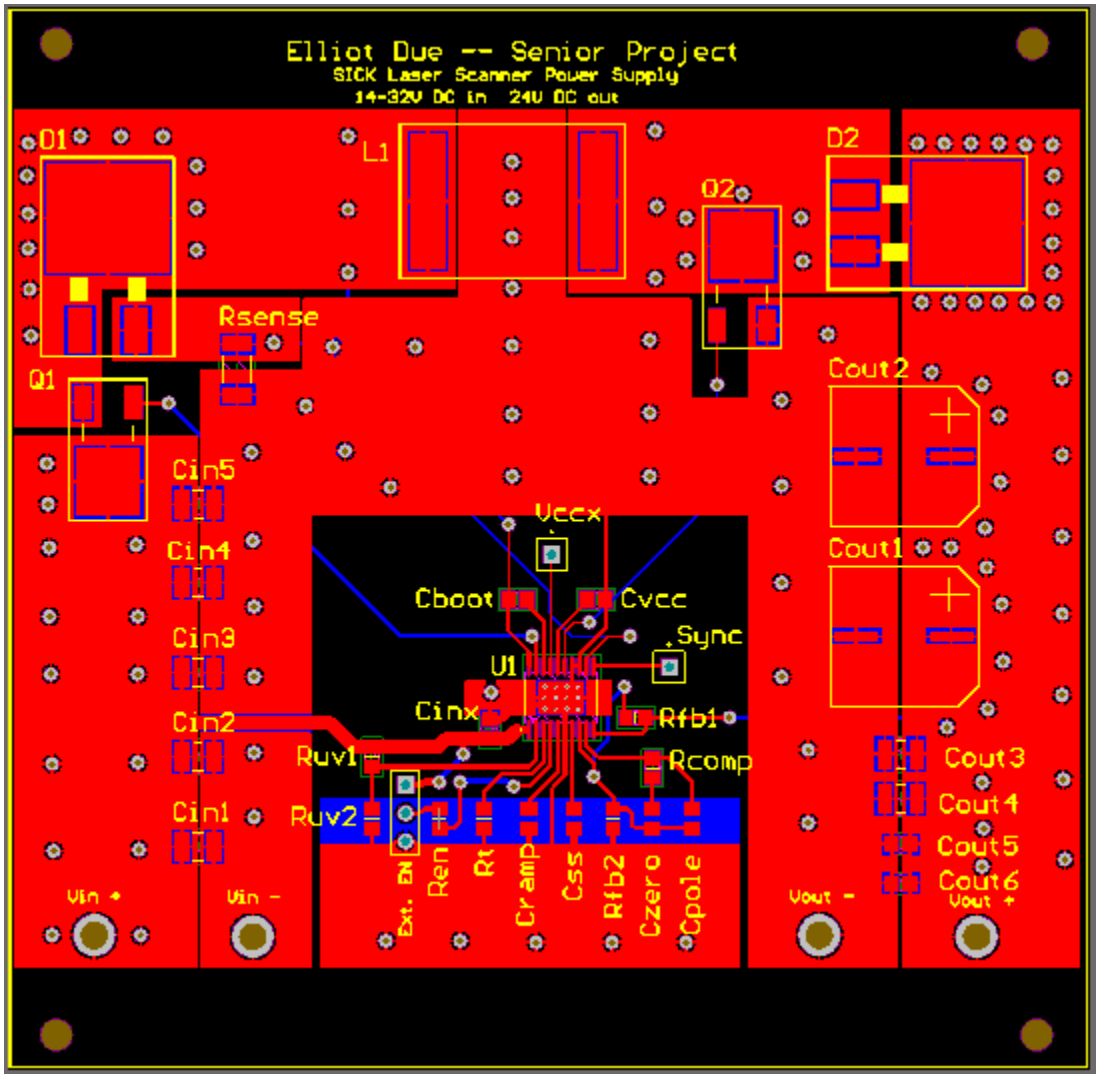

Figure 5. Top layer PCB artwork

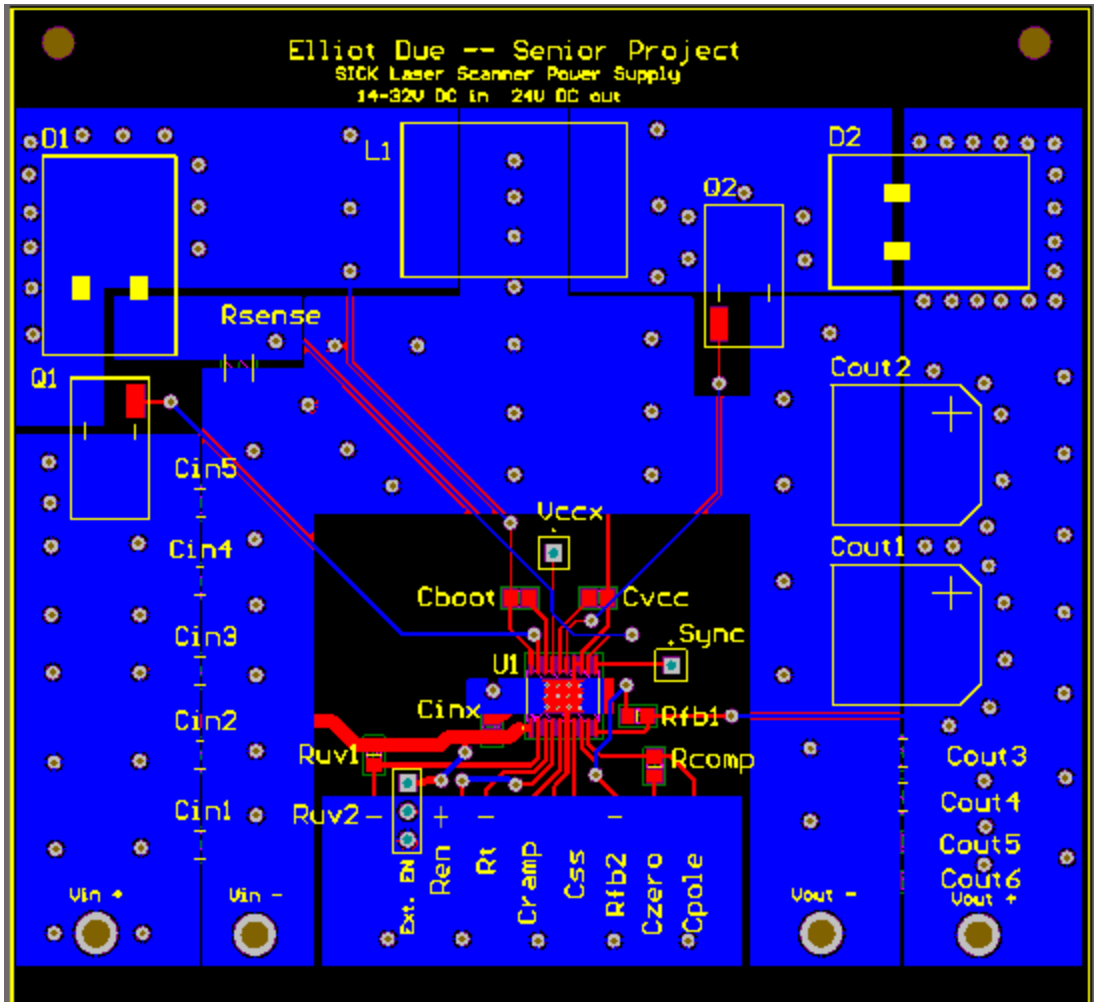

Figure 6. Bottom Layer PCB Artwork

Appendix C – Bill of Materials

Part	Manufacturer	Part Number	Quantity	Attribute	Value
Cout bulk	Panasonic	EEE-FK1H151P	2	Cap	150uF
Cout esr	TDK	C3225X7S1H106M	2	Cap	10uF
Cout HF	Murata	GRM21BR71H474KA88L	2	Cap	.47uF
Cboot	TDK	C2012Y5V1H104Z/0.60	1	Cap	.1uF
Ccomp	Murata	GRM21BR72A123KA01L	1	Cap	12nF
Ccomp2	Yageo America	C2012X7R2A103K	1	Cap	.01uF
Cin	TDK	C3225X7R1H225M/2.50	5	Cap	2.2uF
Cinx	Kemet	C2012X7S2A105K	1	Cap	1uF
Cramp	Yageo America	CC0805KRX7R9BB561	1	Cap	560pF
Css	Yageo America	C2012Y5V1H104Z/0.60	1	Cap	.1uF
Cvcc	Kemet	C2012X7S2A105K	1	Cap	1uF
D1	Vishay-Semiconductor	MBRB1645PBF	1		
D2	Vishay-Semiconductor	MBRB1645PBF	1		
L1	Vishay-Dale	IHLP6767GZER220M11	1	L	22uH
M1	ON Semi	NTD5865NLT4G	1	VdsMax	60V
M2	ON Semi	NTD5865NLT4G	1	VdsMax	60V
Rcomp	Vishay-Dale	CRCW0805182KFKEA	1	Resistance	182K
Renable	Vishay-Dale	CRCW08051M00JNEA	1	Resistance	1.0M
Rfb2	Vishay-Dale	CRCW08051K00FKEA	1	Resistance	1K
Rfb1	Vishay-Dale	CRCW080518K7FKEA	1	Resistance	18.7K
Rramp	Vishay-Dale	CRCW0805100KJNEA	1	Resistance	100K
Rsense	Vishay-Dale	WSL2010R0200FEA18	1	Resistance	.02 ohm
Rt	Vishay-Dale	CRCW080518K2FKEA	1	Resistance	18.2k
Ruv1	Vishay-Dale	CRCW080551K0FKEA	1	Resistance	51k
Ruv2	Vishay-Dale	CRCW08056K98FKEA	1	Resistance	6.98k
U1	National Semiconductor	LM5118Q1MH/NOPB	1		

Table 1. Bill of Materials

Appendix D: Operational Instructions

There are two main things to take into consideration when operating this device. The first is control. There is a three pin header on the board. The top pin is connected to Vcc, the center pin to the enable input of the IC, and the bottom pin is connected to ground. This allows the output to be switched on or off via a number of methods. The first, and simplest, is with a jumper. When the jumper bridges Vcc and the enable line, the device is enabled. Conversely, when ground and the enable line are bridged the output is disabled. If the enable line is left floating, the device is operational, so a floating input should, hopefully, not be presented.

The most convenient method of control is with a manual switch or transistors. If a header is connected to these pins, a simple DPST switch can control the device. Also, a pair of transistors can easily switch the enable line between Vcc and ground. This is up to the discretion of the ultimate user. Lastly, the Vcc line is capable of providing enough current to light an LED if required for visual feedback of the enable lines status.

The second thing to take into consideration is heat. This circuit should go into a suitable location or enclosure as to provide adequate airflow so that temperature does not go out of control. In my testing I have not found there to be issues with temperature providing mild to moderate air flow, however I have not tested an infinite number of situations to say for certain that there will never be an issue.