DC Power Supply with Constant Voltage-Current Proportion

By

Joseph Payette

Senior Project

ELECTRICAL ENGINEERING DEPARTMENT

California Polytechnic State University

San Luis Obispo

2010

Table of Contents

Section *Page*

ACKNOWLEDGEMENTS ..... **V**
ABSTRACT ..... **VI**
INTRODUCTION **1**
BACKGROUND **2**
REQUIREMENTS **6**
SPECIFICATIONS **7**
CONVERTER 7
MICROCONTROLLER 7
DESIGN **8**
CONVERTER TOPOLOGIES CONSIDERED 9
BUCK-BOOST DESIGN CONSIDERATIONS 9
MICROCONTROLLERS 11
SENSING TECHNOLOGY 12
Open Loop vs. Closed Loop Hall Effect 12
FEEDBACK 13
DEVELOPMENT AND TESTING **16**
SIMULATIONS 16
CONVERTER PROTOTYPE BUILD AND PCB DESIGN 22
Breadboard 22
General-Purpose PCB, Hand-Wired 23
Copper-Clad PCB, Homemade 23
PCB, ExpressPCB 25
DC POWER SUPPLY DEVELOPMENT 27
MICROCONTROLLER 29
Development 29
Testing 30
INTEGRATION AND TEST RESULTS **32**
CONCLUSIONS AND RECOMMENDATIONS **38**
REFERENCES **40**
APPENDIX A: TIMELINES **41**
APPENDIX B: BILL OF MATERIALS **43**
APPENDIX C: MICROCONTROLLER SOFTWARE CODE **46**
APPENDIX D: ANALYSIS OF SENIOR PROJECT DESIGN **49**

List of Figures

Figure *Page*

Figure 1: AC Signal 2
Figure 2: Full-Wave Rectified Signal 2
Figure 3: Basic Buck-Boost Circuit 3
Figure 4: Output Voltage vs. Current 7
Figure 5: System Block Diagram 8
Figure 6: Nexys I Development Board, Featuring Spartan3 Microcontroller 11
Figure 7: LTC3780 Simulation Schematic 16
Figure 8: Simulated Input Test and Output Voltages 17
Figure 9: Simulated Gate Switching Speeds 18
Figure 10: Expected Switching Waveforms in Buck Mode 19
Figure 11: Output Voltage vs. Load Current 20
Figure 12: ExpressPCB Converter Layout 24
Figure 13: Top View of Homemade PCB 25
Figure 14: Suggest Converter Layout 26
Figure 15: Final PCB Layout 26
Figure 16: Completed PCB Build 27
Figure 17: DC Power Supply Schematic 28
Figure 18: Repetitive Pulse Timing Diagram 31
Figure 19: Actual Gate Switching Activity 34
Figure 20: Completed Project in Enclosure 36
Figure 21: Microcontroller Unit, Top Mounted 37
Figure 22: Projected Timelines for Spring and Fall, 2010 41
Figure 23: Actual Timelines for Spring and Fall, 2010 42

List of Tables

Table *Page*

Table 1: Buck-Boost Converter Options 10
Table 2: Current Sensor Options 12
Table 3: Digital Rheostats Options 14
Table 4: Output Voltage and Current Characteristics with Changing Load 20
Table 5: Simulated Output Voltage and Current Characteristics with Changing R_2 .. 21
Table 6: Final Converter Output Voltage and Current Characteristics with Changing R_2 32
Table 7: Final Converter Output Using Digital Rheostat 35
Table 8: Copper-Clad PCB Bill of Materials 43
Table 9: ExpressPCB Build Bill of Materials 44
Table 10: Final Build Bill of Materials 45

Acknowledgements

I would like to thank my senior project advisor, Professor Dale Dolan, for the idea and opportunity to work on this project. His support throughout the process has been invaluable to me.

I would also like to thank all of my professors and the EE department for an education that goes above and beyond. Without their support over the years, I would not have been able to accomplish what I have.

Abstract

The purpose of this project is to design and build a DC Power Supply, using digital means, which outputs a constant voltage to current ratio. To accomplish this task, a Buck-Boost converter is used in conjunction with a microcontroller, allowing for digital control over the power supply unit. A Buck-Boost converter is used to adjust the output due to its variability, allowing for an output voltage that is either lower than, the same as, or higher than the input voltage. This is achieved through the use of a current sensing device and digital rheostat, which allows the microcontroller to know what the current is on the output and make changes as necessary.

Introduction

The Electrical Engineering department at the California Polytechnic State University of San Luis Obispo stresses on the importance and necessity of the school's motto of "Learn by Doing" by implementing numerous laboratory exercises that accompany a majority of lectures throughout the curriculum. All of the labs have some sort of DC Power Supply system, whether it is an Agilent, Hewlett-Packard, or a Topward machine. Most of these machines are manual; in order to change the voltage, a knob must be turned by the user. This purpose of this project is to design, build, and test a DC power supply such that a proportional output voltage to current ratio is maintained, through the use of a microcontroller. This creates a digitally controlled DC Power Supply.

Background

Knowledge in the areas of basic circuits, power electronics, and embedded systems is critical to this project, and is used to create a foundation for this project. Understanding how basic circuits and electronics work is fundamental to any project. All small electronics components seen today use a DC voltage source to supply power to the circuitry. However, electricity is transmitted as an AC signal. This means that somehow, the AC signal must be turned into a usable DC signal. This is where knowledge of basic circuits comes into play. An AC signal looks like a sine wave, similar to that of Figure 1.

As can be seen in Figure 1, an AC signal has both a positive and a negative voltage swing. Most small electronics require a constant, positive voltage, such as with a DC signal. Turning an AC signal into a DC one is easily done with the help of a full-wave diode bridge rectifying circuit. Figure 2 shows the signal after running through a full-wave rectifier.

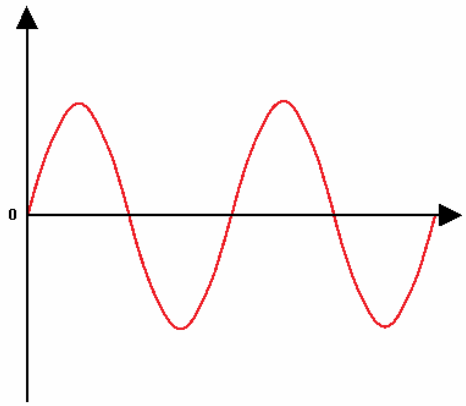

Figure 1: AC Signal

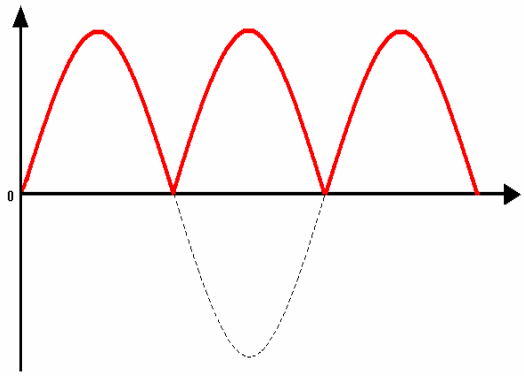

Figure 2: Full-Wave Rectified Signal

Once the AC signal has been rectified, it must be regulated. As can be seen in Figure 2, even though the signal is entirely positive, it still has a swing. This is solved through the use of a voltage regulating circuit. Doing this, in conjunction with the full-wave diode rectifying bridge, allows the signal to go from a raw AC signal, to a uniform and constant DC signal, thus making it usable for small circuits applications.

To assist in the raising and lower of the output voltage, a converter is being used. Converters fall into the area of power electronics. Power electronics uses solid state electronics to aid in the control of and conversion of electric power. All DC-DC converters use similar circuit configurations. Critical to each type is a switch, a diode, and an inductor. The basic Buck-Boost converter topology is depicted in Figure 3.

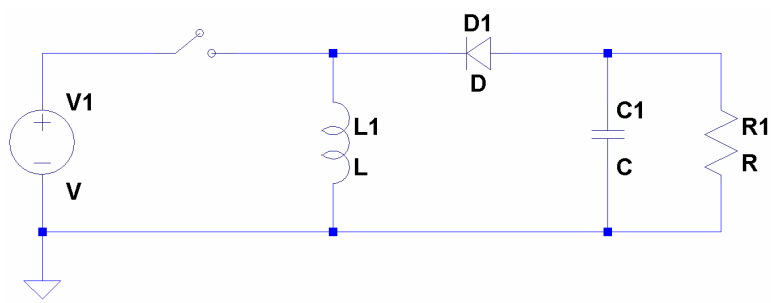

Figure 3: Basic Buck-Boost Circuit

For a Buck-Boost converter in Continuous Conduction Mode (CCM), the output voltage is represented as $-V_s\left[\frac{D}{1-D}\right]$, while in Discontinuous Conduction Mode (DCM), the output voltage is represented as $-V_s D\sqrt{\frac{RT}{2L}}$, where D is the duty cycle, R is the resistance, L is the inductance, and T is the period. As a result of operation, a Buck-Boost converter requires large filtering requirements on both the input and output of the system. This means there is a need for more components in the overall design.

A microcontroller is a device that has the ability to control hardware components based on software coding. This is also known as an embedded system, with the software code being what is embedded into hardware functionality. For purposes of this project, the microcontroller is designed using Xilinx's Embedded Development Kit (EDK). This allows the user to add various IP cores to the project. Such cores include: the processor; a general purpose input/output (GPIO), such as for buttons, switches, and LCD display, and other various external attachments; serial peripheral interface (SPI) bus communication; etc. Doing this establishes the hardware and necessary connections that are going to be used in the microcontroller. Each hardware connection corresponds to a locked pin connection on the Nexys I Development Board. Using these pin allocations, the microcontroller is able to identify which hardware signals need to go where so that the microcontroller functions properly.

Once the hardware has been set up, the user can then incorporate the software code into the microcontroller. Of course, having knowledge in a programming language, such as C used in this case, is not enough to get the microcontroller to work. Even though the hardware has been connected, the software has to tell the microcontroller that a particular hardware component is to be used. To do this, proper coding is essential. For example, to light an LED on the Nexys Board is not as simple as feeding a logic high or low to a particular pin assigned to an LED. The microcontroller would not know what to do, since the proper code (i.e. telling it to send data to the LED) has not been given. To accomplish this, the following code must be incorporated:

```
XIo_Out32(XPAR_LEDS_BASEADDR + 4, 0);
```

This single line of code tells the microcontroller to set the LEDS GPIO to output mode. Once this has been established, a logic high or low can be sent to the LED. This is also true of the input, such as for buttons. The code that reads in data from the buttons looks like:

```
XIo_In32(XPAR_BUTTONS_BASEADDR);
```

This tells the microcontroller to set the BUTTONS GPIO to input mode. This allows the microcontroller to read in data from the buttons. Knowing these software codes allows the microcontroller to know what to do with hardware signals it has.

When dealing with more complex attachments, such as the LCD display, an analog-to-digital converter, or a digital-to-analog converter, the above coding must also include hex addressing. This not only tells the microcontroller what to do with hardware signals, but in some cases, it actually manages the hardware. Note the following snippet of code:

```
XIo_Out32(DAC_SPISSR, 0xFFF);
```

This code tells the microcontroller to establish the DAC_SPISSR (which is part of the SPI communication with the DAC) for output. Simultaneously, 0xFFF tells the SPI core that it needs to disable the slave select register. Changing the 0xFFF hex address changes the operation of the SPI core. Certain hardware components, such as the DAC, require certain actions to take place before the desired output can be achieved, and this is only accomplished by changing the hex address.

Requirements

The overall system should meet all of the following design stipulations:

I. The circuit should be able to handle a large variable DC input voltage.

II. The circuit should be able to output a constant DC voltage, as defined by the user.

III. The system should pose no threat of electrical shock to a user.

IV. The Converter topology used should allow for maximum efficiency and a wide ranging current and output voltage to meet all specifications.

V. The microcontroller is to take in data from the output of the converter and be able to adjust the converter based on that data.

Specifications

1. The overall DC power supply system needs to be able to operate within a reasonable output voltage range, such as those for a standard DC power supply. This range should be from 0V to 25V.
2. The Converter design needs to accommodate an input voltage range similar to that of the output of the DC Power Supply. This range should be up to at least 25V.
3. The output voltage vs. current should look similar to Figure 4.

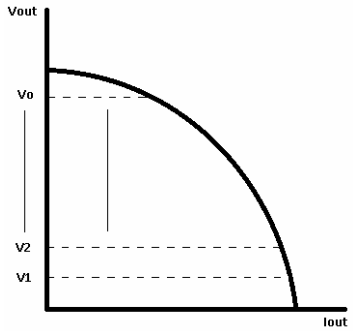

Figure 4: Output Voltage vs. Current

Converter

The Converter topology used must accommodate for an input voltage of 5 volts DC. The voltage output should be able to range from roughly 0 volts DC up to at least 25 volts DC.

Microcontroller

The microcontroller needs to be able to accept information in regards to either the current output or voltage output. The microcontroller should allow for the user to be able to change the output of the device.

Design

The basic “Black Box” block diagram for the overall system is depicted in Figure 5.

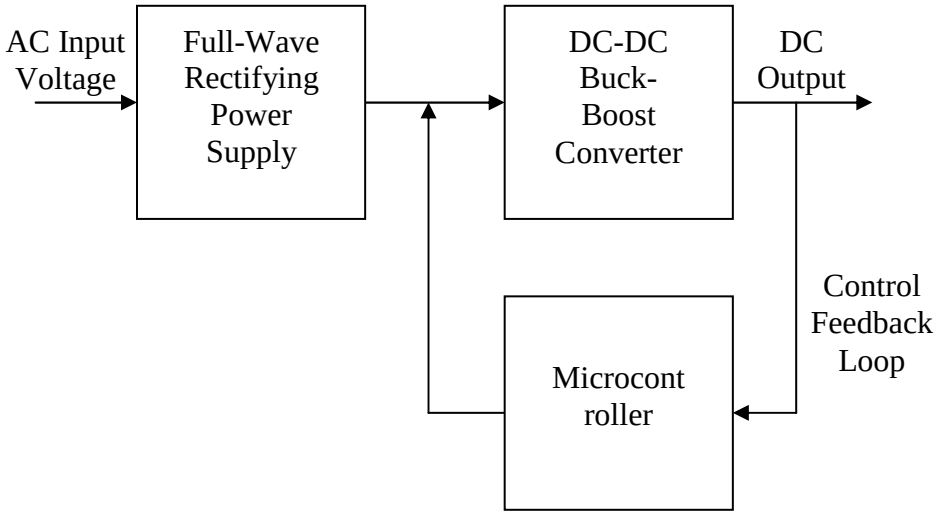

Figure 5: System Block Diagram

As can be seen in Figure 5, the Power Supply uses a full-wave rectifier to turn the AC voltage signal into a DC voltage. That, in turn, is input to the converter which serves as the output of the system. In order to maintain the necessary voltage to current ratio, a feedback loop is created by means of a microcontroller. The microcontroller reads the output current of the converter, through the aid of a current sensing device, and adjusts the converter output accordingly.

Converter Topologies Considered

The purpose of the converter is to allow the output voltage to be raised or lowered as necessary. While there are many topologies available for use, only a few would be most practical in this application. Two such topologies that were considered were the Non-Isolated Buck (step down) and the Non-Isolated Buck-Boost (step down/up) Converters.

1. Non-Isolated Buck Converter

   The Buck Converter topology is a step-down DC-DC converter type that can very efficiently step down a given voltage and is self-regulating. This allows the output voltage to stay constant with a change in input voltage.

2. Non-Isolated Buck-Boost Converter

   The Buck-Boost Converter topology is a combination of the Buck and Boost converter types, allowing for both step-down and step-up properties. It very efficiently outputs constant voltage over a large input voltage range. Its largest advantage is the fact that it allows an output voltage that can be either greater than, less than, or equal to the input voltage within a single converter topology.

After carefully considering the pros and cons of each type, the Buck-Boost converter topology provides the most flexibility. Therefore, it is used in this application.

Buck-Boost Design Considerations

Even though the Buck-Boost converter topology is used in this application, further considerations must be taken into account before making any final decisions. The overall system needs to be able to output over a wide range, therefore the converter needs to have a wide range both on the input and the output. Table 1 compares various converter options available.

Table 1: Buck-Boost Converter Options

Converter Chip	LTC3780	LTM4607	LTM4609
Manufacturer	Linear Technology	Linear Technology	Linear Technology
Input (V)	4-36V	4.5-36V	4.5-36V
Output (V)	0.8-30V	0.8-24V	0.8-34V
Output (A)	20A	5A (Boost) 10A (Buck)	4A (Boost) 10A (Buck)
Additional Components	Up to 20	Up to 8	Up to 7
Operating Frequency	200-400kHz	200-400kHz	200-400kHz
Efficiency	98%	98%	98%
Cost	$5.47	$25.35	$27.38

All of the options investigated are quite comparable to one another. Here is a list of some of the key factors taken into consideration when looking at the three options:

- The most critical of criteria is the output voltage, needing to range from 0 volts to at least 25 volts, if not more.
- The input voltage needs to have a wide range, though for this application the converter will receive a constant input voltage.
- Converter cost, taking into consideration any additional components necessary for proper function.

In the end, the LTM4607 was dropped from consideration because it did not meet the necessary minimum 25V output desired. The LTC3780 and LTM 4609 share similar properties. Both offer a wide input and output voltage range. Ultimately, the LTC3780 is chosen for this application in large part due to its low cost.

Microcontrollers

The microcontroller choices are flexible. The two considered were the PIC family and the Spartan3, used in conjunction with the Nexys I Development Board system. While both have a lot to offer, the Spartan3 was chosen for various reasons. For one, this system has been used in multiple labs. This means an increased knowledge of the device over the PIC system. Already knowing how the device works and how to operate it reduces the amount of time spent working on it.

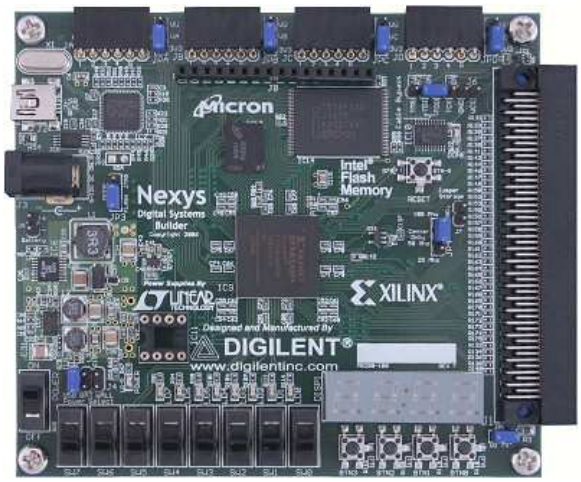

Figure 6: Nexys I Development Board, Featuring Spartan3 Microcontroller

Since the Spartan3 microcontroller is part of the Nexys system, it offers more immediate features. For example, it has incorporated switches and buttons, as well as four ports for extra peripheral attachments, making it convenient to add other devices. Also included is a USB data port, making programming of the microcontroller easy. Furthermore, the Spartan3 supports up to 216 kilobits of RAM (a kilobit being 1024 bits), which is more than ample for the scope of this project.

Sensing Technology

In order for the microcontroller to be able to accurately adjust the output of the converter, it needs to take in information regarding the output. In this case, a current sensing device will be employed. Table 2 compares a few sensors that were considered for this project.

Table 2: Current Sensor Options

Model	LAH 25-NP	LAH 100-P	LAX 100-NP	S22P015S05	HXS 20-NP
Manufacturer	LEM USA Inc	LEM USA Inc	LEM USA Inc	Tamura	LEM USA Inc
Accuracy	±0.3%	±0.25%	±0.91%	±0.25%	<±1%
Response Time	<500ns	<500ns	100ns	<1µs	<5µs
Sensor Type	Closed Loop Hall Effect	Closed Loop Hall Effect	Closed Loop Hall Effect	Closed Loop Hall Effect	Open Loop Hall Effect
Current Sensing	25A	100A	100A	±15A	±20A
Supply Voltage	12V ~ 15V	-12V ~ 15V	±11.4V ~ 15 V	±5V	5V
Cost	$23.05	$26.50	$25.38	$15.18	$14.00

Some key factors in determining which sensor to use are as follows.

- The device needs to have an adequate sensing range.
- The device needs to minimize necessary supply voltages.
- The device needs to maintain reasonable accuracy and adequate response time.
- Open loop vs. closed loop hall effect.
- Overall cost of the device.

Open Loop vs. Closed Loop Hall Effect

The Open Loop Hall Effect uses a Hall device to measure the magnetic flux in the air gap of a magnetic circuit created by the primary input current. The output of the Hall device is signal conditioned, allowing for an exact representation of the primary current at the output. The

Closed Loop Hall Effect takes the magnetic flux created by the primary input current and balances it by driving current through secondary windings, thus creating a complementary flux. It also uses a Hall device, but in this case it is used to generate the secondary current, again allowing for an exact representation of the primary current at the output. While both are comparable, Closed Loop Hall Effect sensors have certain advantages over Open Loop Hall Effect sensors that are beneficial to this application, as demonstrated by the following:

Open Loop Hall Effect

- Small package size
- Extended measuring range
- Reduced weight
- Low power consumption
- No insertion losses

Closed Loop Hall Effect

- Wide frequency range
- Good overall accuracy
- Fast response time
- Low temperature drift
- Excellent linearity
- No insertion losses

Specifically, Closed Loop Hall Effect sensors offer better accuracy with a faster response time and can operate over a wider frequency range. For these reasons, a Closed Loop Hall Effect sensor is used for this application.

Based on the data of Table 2, the LAH 100-P from LEM USA Inc is used for this project. It has wide ranging voltage supply requirements, good accuracy, and a good response time. It also operates under the Closed Loop Hall Effect principal. Though it is more expensive than some of the others, its benefits outweigh this downside.

Feedback

The current sensing device is critical to the start of the feedback loop. This is where the data comes into the microcontroller from the converter. However, the opposite end of the loop is just as important. In order for the microcontroller to do its job, it needs to be able to make any

necessary adjustments to the converter itself. This is done through the use of a digital rheostat. The digital rheostat will be connected to the converter in place of R_2, which is used to adjust the voltage and current output of the converter. Connecting this digital rheostat to the microcontroller completes the feedback loop, thus allowing the microcontroller to adjust the converter output as necessary. A few of the digital rheostats that were considered are detailed in Table 3.

Table 3: Digital Rheostats Options

Model	MCP4232-104	MCP4252-104	DS1869-100+	DS1869S-100+
Manufacturer	Microchip Technology	Microchip Technology	Maxim Integrated Products	Maxim Integrated Products
Supply Voltage	1.8V ~ 5.5V	1.8V ~ 5.5V	3V or 5V	3V or 5V
Memory Type	Volatile	Volatile	Non-Volatile	Non-Volatile
Resistance	100k	100k	100kΩ	100kΩ
Tap Points	129	257	64	64
Interface	SPI Serial	SPI Serial	Contact Closure	Contact Closure
Mount Type	Surface	Surface	Through-hole	Surface
Cost	$0.98	$1.02	$6.39	$6.66

While each of the digital rheostats described in Table 3 have their pros and cons, the through-hole, DS1869-100+ by Maxim Integrated Products is utilized. The DS1869-100+ has non-volatile memory, which means that the wiper position will be maintained once the unit has been turned off, and the through-hole option is easier to incorporate than the surface mount option. Since it does not use an SPI interface to communicate with the microcontroller, a simple high or low signal can be sent to the DS1869-100+, causing the digital rheostat to

either increase or decrease. While the DS1869-100+ is on the expensive side, its ease of use makes it an ideal choice for this application.

Development and Testing

The development phase is broken into multiple parts, starting with the simulations and construction of the Buck-Boost Converter, similarly followed by the Power Supply and Microcontroller. Simulation of the Converter is accomplished with the assistance of Linear Technology's LTSpice software.

Simulations

Linear Technology not only supplies the LTC3780 model for simulation purposes, but also includes a completed schematic for use with LTSpice. This allows the user to simply change component values as necessary, without much complication. Using the supplied schematic, as depicted in Figure 7, the system is simulated to understand how it acts when in Buck, Boost, and Buck-Boost modes, as well as when supplying different input voltages.

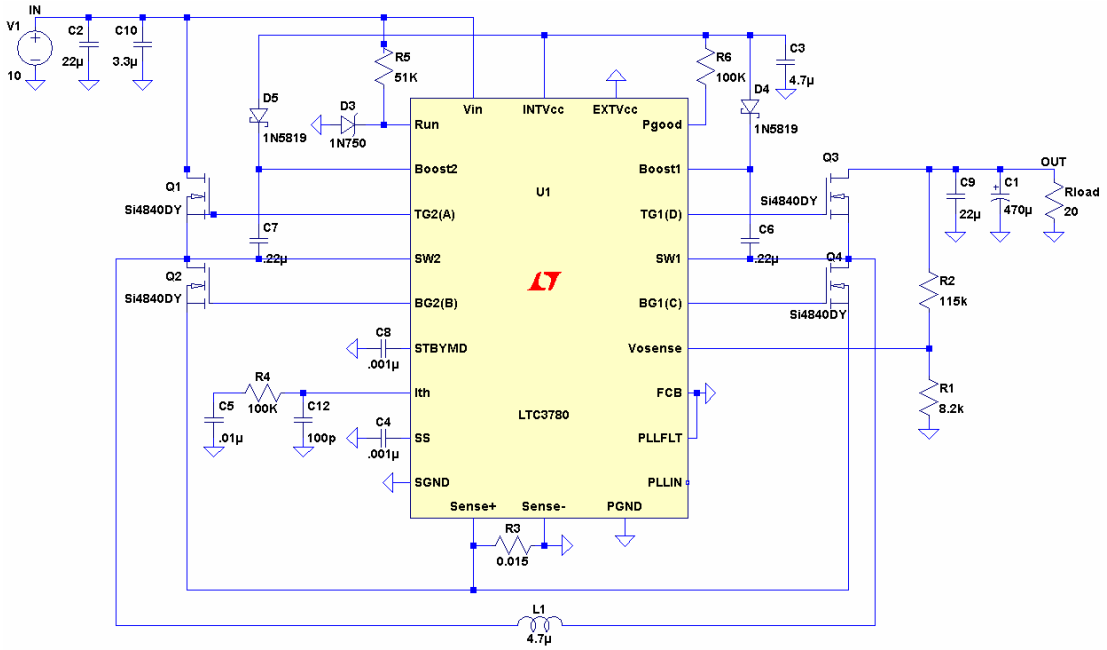

Figure 7: LTC3780 Simulation Schematic

Simulations of the LTC3780 model of Figure 7 yield the following information in regards to the input and output voltages, as well as each of the four switches.

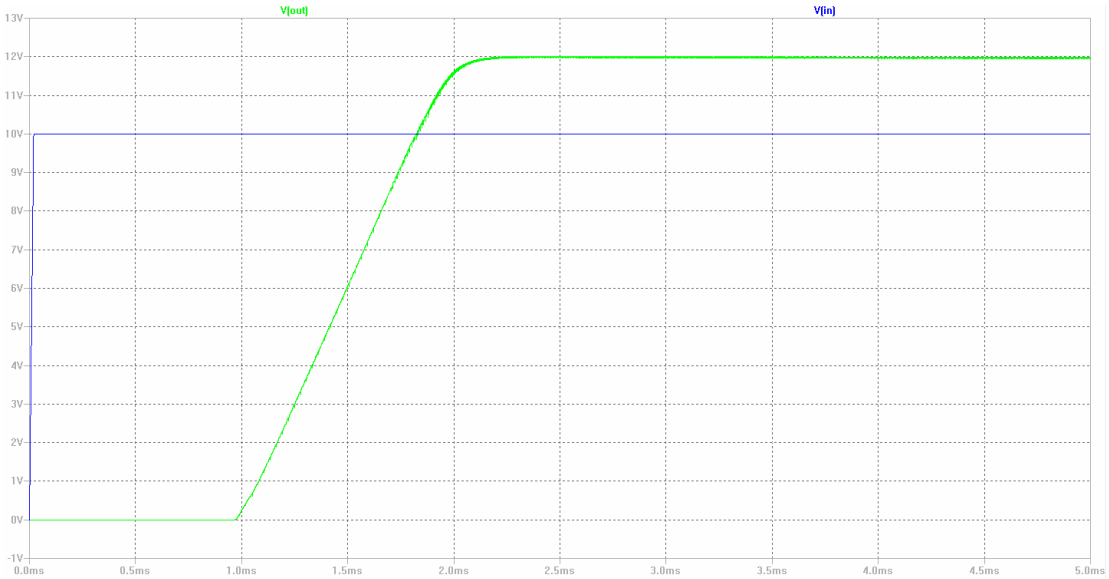

Figure 8: Simulated Input Test and Output Voltages

With the provided simulation schematic of Figure 7, the output voltage comes out to 12 volts. This is calculated using the following formula, provided in the LTC3780 data sheet:

$$V_{out} = 0.8(1 + \frac{R_2}{R_1})$$

By changing either R_1 or R_2, the output voltage of the converter can be adjusted as necessary. In order to achieve an output of 12 volts, R_1 is equal to 8.2KΩ and R_2 is equal to 115KΩ.

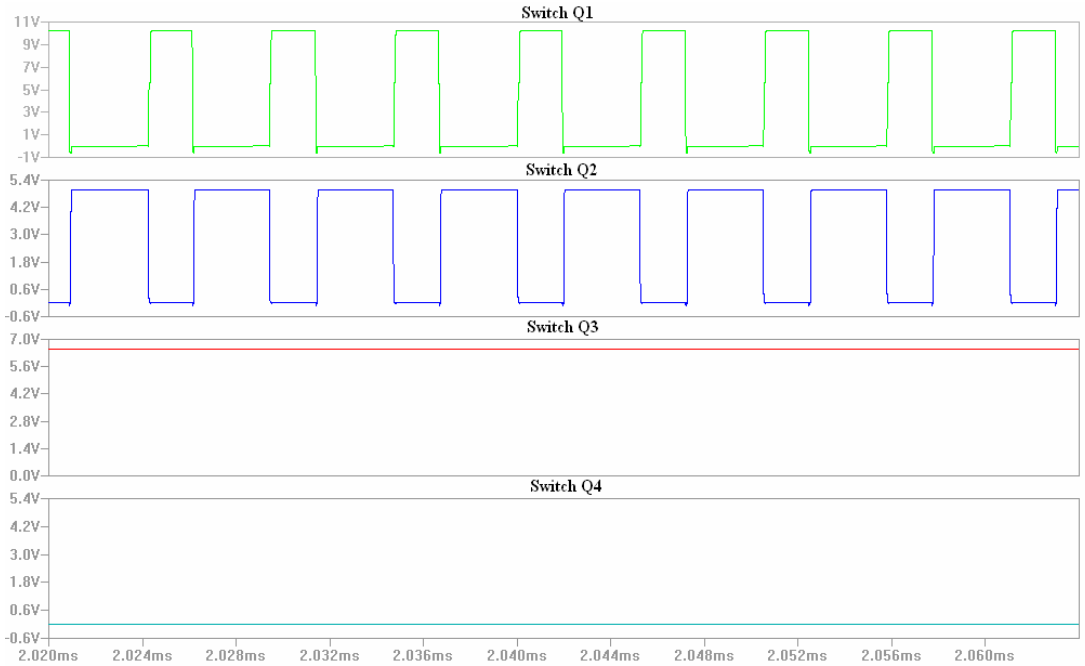

Figure 9: Simulated Gate Switching Speeds

Figure 9 shows the gate switching speeds for each switch, which tells how each gate is acting during a particular converter mode. The simulated switching speeds of Figure 9 are while the converter is in the Buck mode of operation, which brings the output voltage to something lower than the input voltage. Switch Q3 is always on while switch Q4 always off. This means that there is no activity on switches Q3 and Q4 while in the Buck mode. On the contrary, Switches Q1 and Q2 are switching on and off. According to the data sheet for the LTC3780 provided by Linear Technology, this is what should be expected; “Switch [3] is always on and switch [4] is always off during [Buck] mode…Switches [1] and [2] will alternate, behaving like a typical synchronous buck regulator” (12). Figure 10 depicts the expected waveforms provided by Linear Technology for this chip.

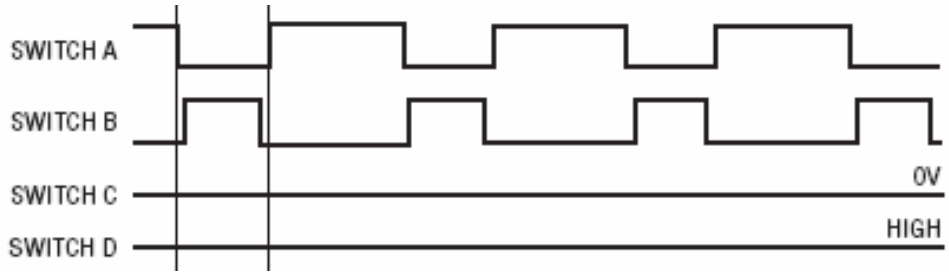

Figure 10: Expected Switching Waveforms in Buck Mode

In Figure 10, Switch A corresponds to switch Q1, switch B corresponds to switch Q2, switch D corresponds to switch 3, and switch C corresponds to switch Q4.

As can be seen, simulations match the expected outcome of the Converter while in the Buck mode of operation. For Buck-Boost mode converter, all switches are active (meaning they are switching on and off). For a Boost mode converter, switch Q1 is always on, switch Q2 is always off, and switches Q3 and Q4 are the only two switching.

The following table shows how the output voltage changes with varying loads, and the effect it has on the output current:

Table 4: Output Voltage and Current Characteristics with Changing Load

Vin (V)	Load (Ω)	Vout (V)	Iout (A)
5	1	9.7	9.7
5	1.5	11.7	7.8
5	2	11.8	5.9
5	2.5	11.8	4.7
5	3	11.9	3.9
5	3.5	11.9	3.4
5	4	11.7	2.9
5	4.5	11.9	2.6
5	5	11.8	2.4
5	6	11.9	1.9
5	7	11.9	1.7
5	8	11.9	1.5
5	9	11.9	1.3
5	10	11.9	1.2
5	12	11.9	0.998
5	14	11.9	0.855
5	16	11.9	0.747
5	18	11.9	0.664
5	20	11.9	0.599

As can be seen from Table 4, changing the load affects the output current significantly. As the load changes from 1 Ω to 20 Ω, the output current decreases from 9.7 A to approximately 600 mA. Figure 11 below shows a graphical representation of the numeric data in Table.

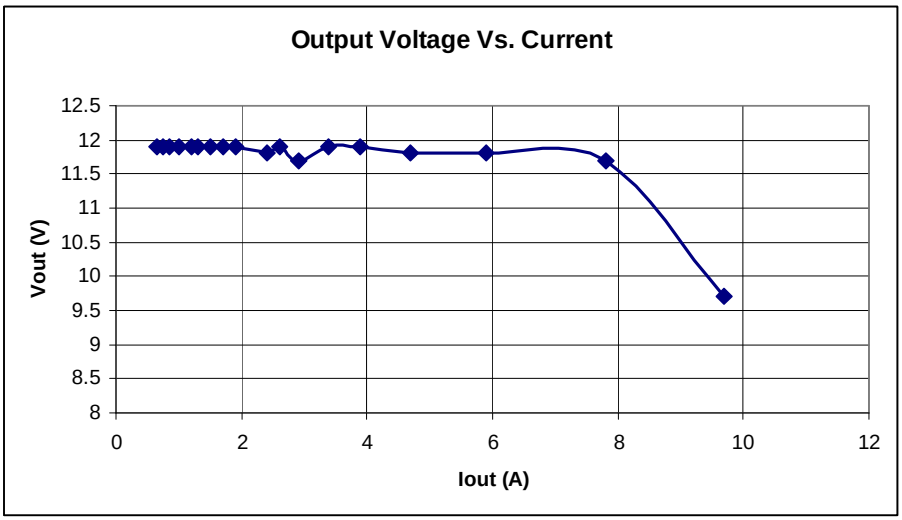

Figure 11: Output Voltage vs. Load Current

Table 4 shows how changing the load resistance affects the output current, but has little effect on the output voltage. To change the output voltage, either R_1 or R_2 must be adjusted. In this case, R_1 will be left constant and R_2 will become variable. Table 5 below shows how changing the value of R_2 affects the output voltage of the converter.

Table 5: Simulated Output Voltage and Current Characteristics with Changing R_2

Vin (V)	R_1 (Ω)	R_2 (Ω)	Vout (V)	Iout (A)
5	8,200	10,000	1.75	0.0877
5	8,200	15,000	2.29	0.1146
5	8,200	20,000	2.78	0.1391
5	8,200	25,000	3.27	0.1637
5	8,200	30,000	3.72	0.1860
5	8,200	35,000	4.26	0.2128
5	8,200	40,000	4.72	0.2361
5	8,200	45,000	5.19	0.2598
5	8,200	50,000	5.72	0.2860
5	8,200	60,000	6.70	0.3348
5	8,200	70,000	7.65	0.3826
5	8,200	80,000	8.60	0.4312
5	8,200	90,000	9.60	0.4799
5	8,200	100,000	10.54	0.5268
5	8,200	150,000	15.32	0.7658
5	8,200	200,000	20.2	1.0
5	8,200	250,000	25.0	1.25

The data in Table 5 shows that as R_2 increases, the output voltage increases. The output current also increases, but as was shown in Table 4, this can be countered by adjusting the load resistance of the converter.

Converter Prototype Build and PCB Design

The prototype design went through numerous build attempts, employing various techniques ranging from the simple breadboard to a professional build. The cycles are as follow:

1. Breadboard
2. General-Purpose PCB, hand-wired
3. Copper-clad PCB, homemade
4. PCB, ExpressPCB

Breadboard

The first prototype build attempt was done with the use of a breadboard. Since the LTC3780 is only available as a surface mount component, and the power FET gates are also surface mount, special SMT-to-DIP adaptors are necessary. These were obtained through Logical Systems, as 8 pin and 24 pin adaptors. Though the use of a breadboard is a convenient means in which to wire any circuit, it also has its drawbacks. The breadboard works by internally wiring each row individually, thus minimizing the need to run connecting wires. Components are essentially plugged into the board, allowing other components to be easily connected to or even swapped out with great ease. As a result, however, components have a tendency to become loose, or even dislodged. The breadboard itself also provides roughly 1Ω of resistance (per row) to the circuit. Though it is minimal and negligible in most circuit applications, the converter design of the LTC3780 uses current sensing resistors on the order of 10mΩ, thus rendering it ineffective. This technique made it virtually impossible to get a working converter.

General-Purpose PCB, Hand-Wired

The second prototype build attempt was done with the use of a pre-printed PCB. The specific one that was used is the general-purpose printed circuit board from Radio Shack (model number 276-149). Again, the LTC3780 chip and the power FET gates must use the SMT-to-DIP adapter. This technique allows for convenient placement of components, but must have all components soldered into place. In addition, everything must be hand wired, point-to-point, and soldered in place. Though soldering itself is not difficult, it becomes more difficult to coordinate where wires are running and which components they are connecting. This attempt proved to be far more difficult than was originally anticipated, yielding a nonfunctioning converter.

Copper-Clad PCB, Homemade

The third prototype build attempt was done with the use of a homemade version of a printed circuit board. This technique starts by creating the layout with the help of a PCB layout program. In this case, ExpressPCB was used. This allowed for component placement for both through-hole and surface mount components, and the necessary traces that connect them. Figure 12 below shows the final layout pattern that was used.

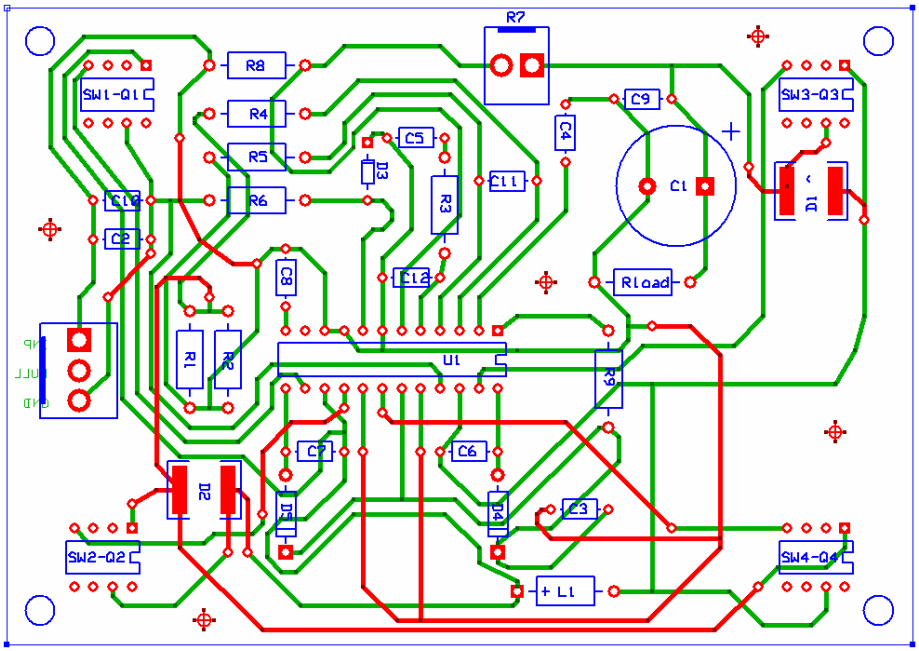

Figure 12: ExpressPCB Converter Layout

Figure 12 shows component placement (blue), as well as upper (red) and lower (green) traces. Due to the complexity of the circuit design, it is impossible to keep all traces on a single side. In order to create the printed circuit board as shown below in Figure 13, the toner transfer method for creating PCBs was employed. This process requires the use of a laser printer. The toner found in laser printers is made with a plastic base, which is resistant to the Ferric Chloride etching chemical. The layout of Figure 12 was printed on the most basic photo paper, which has little to no glossy finish on it. Once the upper and lower traces have been printed, they are transferred onto a clean, copper-clad board with extreme heat and pressure. In order to ensure adequate transfer, the board must be cleaned thoroughly with an abrasive pad, such as a stainless steel cleaning pad. This not only removes any dirt from the surface of the board, but also slightly scratches the surface, thus creating a better surface to which the plastic-based toner adheres. Once the toner has been transferred, and the board has had a chance to cool, a resist pen is used to fill in any gaps that may not have transferred entirely. Once this is completed, the board is place into a large container and submerged in the Ferric

Chloride etching chemical. Agitation is critical to make sure the board etches correctly. Figure 13 shows the final outcome of this process.

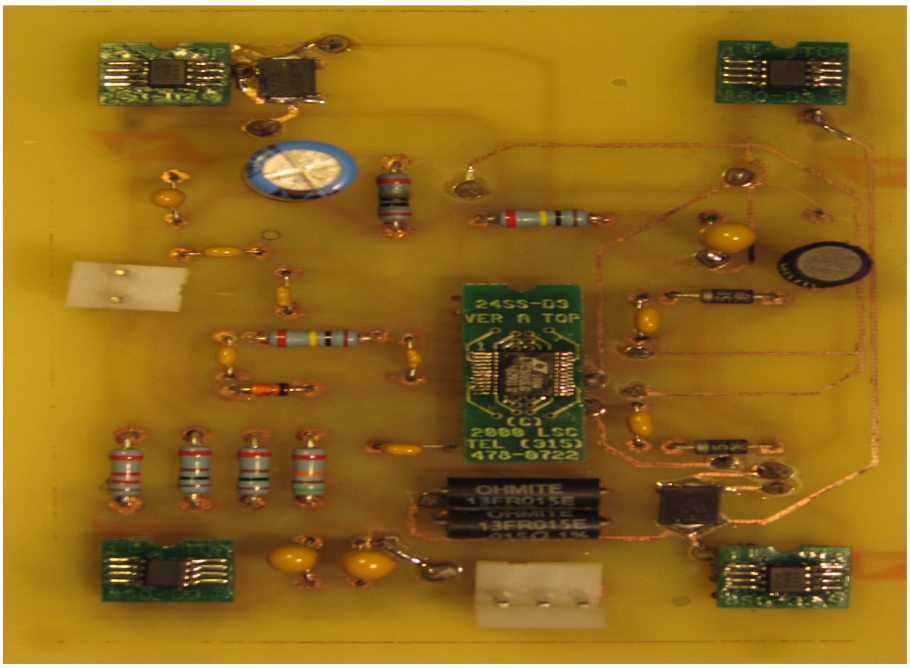

Figure 13: Top View of Homemade PCB

This attempt proved to be significantly more successful than previous attempts. By minimizing traces, excess resistance and, subsequently, noise was reduced. Even though this showed signs of success, it still did not provide the necessary output capabilities that were originally sought.

<u>PCB, ExpressPCB</u>

The final prototype build attempt was done in a similar fashion to the third attempt. In this case, the board was printed professionally. Also, certain suggestions, courtesy of Linear Technology, were taken into consideration when designing the layout of the converter. The most significant changes are depicted in Figure 14, which shows the use of planes and placement for the more critical, high power components, such as the power FET switches, input and output capacitors, and the inductor.

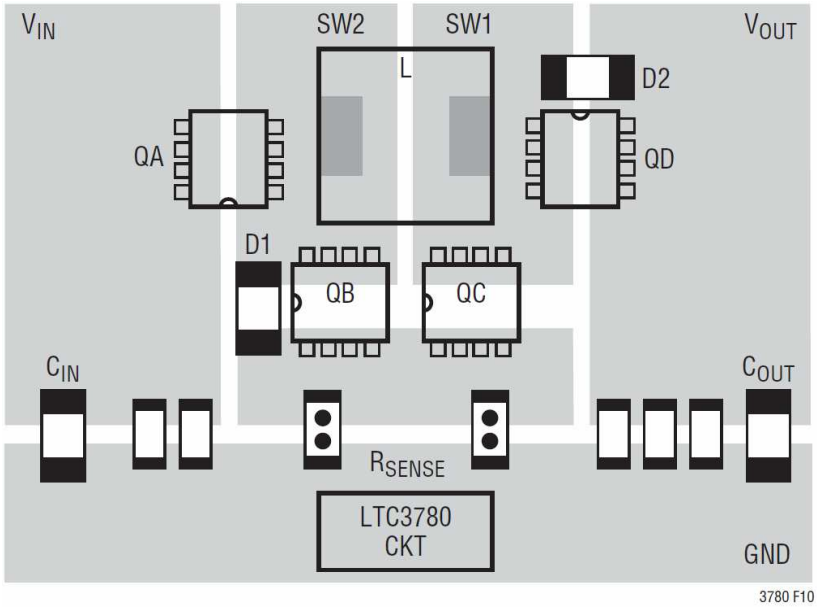

Figure 14: Suggest Converter Layout

Having taken the above-mentioned suggestions, as well as others, into consideration, the layout of Figure 15 was produced.

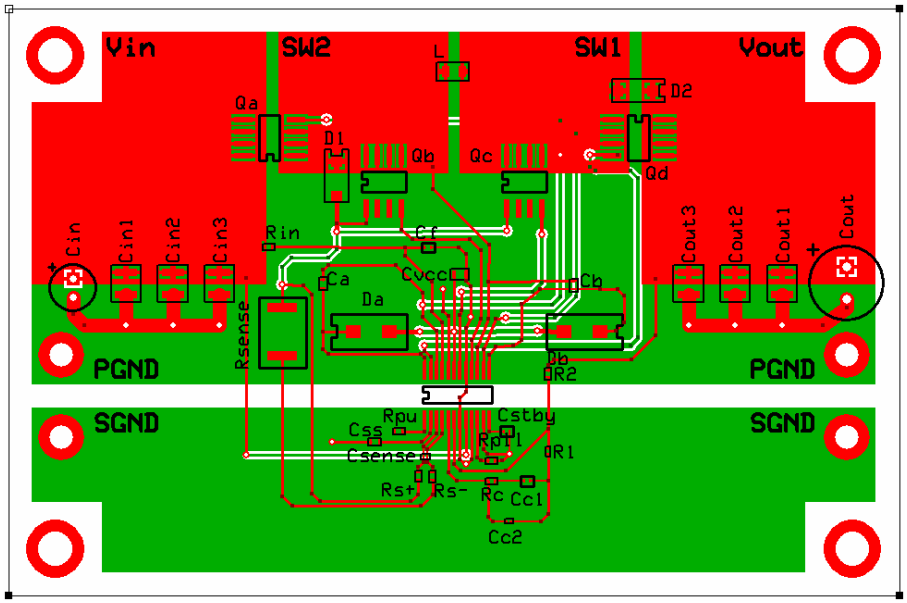

Figure 15: Final PCB Layout

By having dedicated planes for the input, output, and ground, excess noise is greatly reduced. Once this design was completed, ExpressPCB was used to manufacture the board. Having it done this way ensures that the traces are all connected (no hair-line fractures due to incomplete transfer of toner). The finished product, including all components soldered into place, is shown in Figure 16.

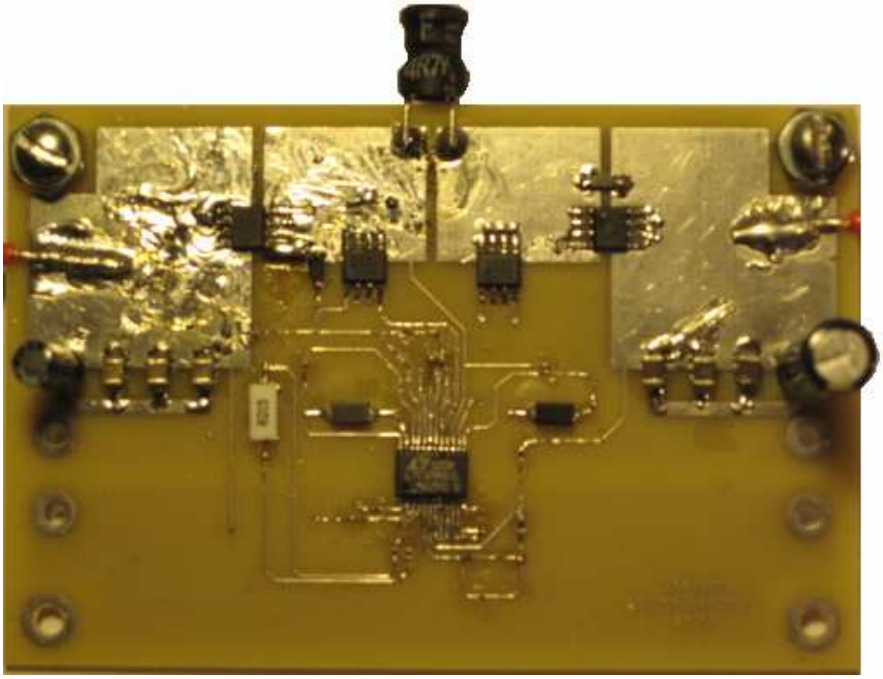

Figure 16: Completed PCB Build

DC Power Supply Development

The DC power supply is designed so that it can take in a standard 120 volts from any wall receptacle, and output a DC voltage. This is done in steps, outlined as follows:

1. Using a step down transformer to bring the voltage from 120 volts to a smaller voltage.
2. Convert the AC signal into a DC signal.
3. Output a steady DC voltage.

The first step is to step down the input voltage. This is accomplished using a transformer that takes the 120 volt input AC signal and steps it down to a 20 volt AC signal. In order to create the necessary DC output, the AC signal needs to be rectified. A full-wave rectifier is, therefore, implemented. Though the signal is no longer an AC signal, which oscillates similar to a sine wave, it is still not a DC signal. This new signal needs to be regulated so that a constant DC output voltage is achieved. To accomplish this, the LM317 Voltage Regulator is used. This allows for a minimum of 1.2 volts up to 36 volts on the output, depending on the external circuitry. For purposes of this project, the external circuitry is designed to create 5 volts on the output that will be fed into the converter. Figure 17 shows the power supply schematic, allowing for an output of 5 volts.

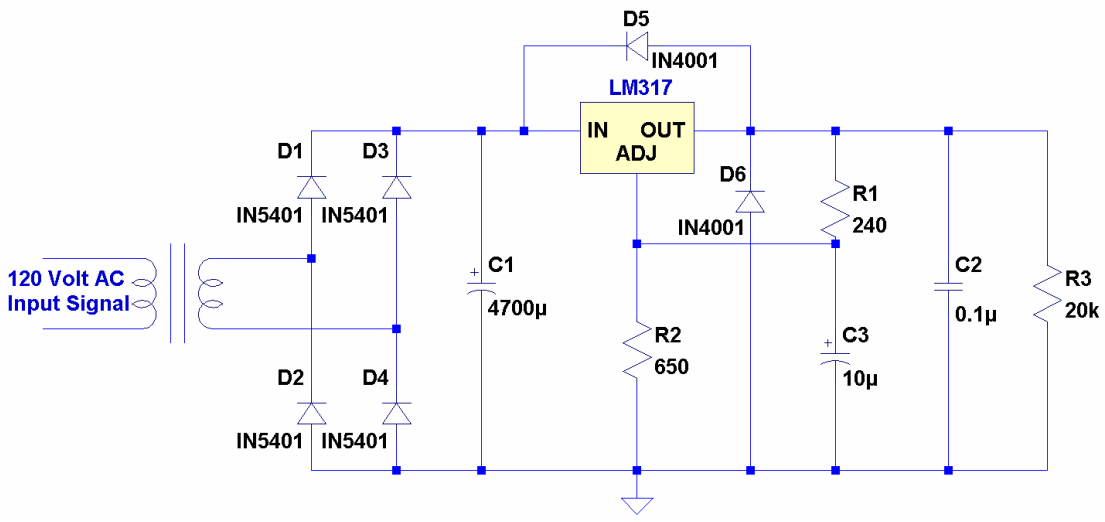

Figure 17: DC Power Supply Schematic

Microcontroller

Development

The development of the microcontroller differs significantly from the rest of the project. Instead of designing something to be built and tested later, the microcontroller is designed on the computer using the Xilinx Embedded Development Kit (EKD) in the C programming language. An embedded system uses software coding in conjunction with hardware.

For this project, the microcontroller serves as a feedback loop for the converter, taking in necessary information about the output and being able to make adjustments to the converter to change the output as necessary.

In order for the microcontroller to function as desired, it needs to be able to read in the current on the output of the converter. This is accomplished through the use of a current sensing device. The current sensor chosen for this purpose, based on the data in Table 2, is the LAH 100-P from LEM USA Inc. This device is attached to the output of the converter and fed into the microcontroller through an Analog-to-Digital Converter (ADC). This allows the analog data coming from the converter to be turned into a useful, digital signal that the microcontroller can implement to analyze and make any necessary changes to the converter. In order for the ADC to be able to establish proper communication with the microcontroller itself, it must be connected using a low speed Serial Peripheral Interface Bus, or SPI. Once the microcontroller has this data, it can make changes to the converter as necessary to meet system requirements.

As was discussed above, the converter voltage can be adjusted by changing the value on R_2. Likewise, the current can be varied by adjusting the load resistance. This is done through the use of a digital rheostat. A digital rheostat has the same function as a normal rheostat (or potentiometer), but is controlled by a microcontroller. It uses various signals to tell it to

activate, increase, decrease, or do nothing, all of which come from the microcontroller. This digital rheostat is connected to the converter in place of R_2, and is connected to the microcontroller in a similar fashion as the current sensing device. The chosen digital rheostat uses contact closure to adjust the resistance. In order to properly communicate with the digital rheostat, a high and low signal must be sent from the microcontroller. This is accomplished through the use of a DAC, which, similar to the ADC, uses an SPI to establish communication.

Testing

Testing of the microcontroller is done in stages. New components are added only after prior components have shown to work correctly. To start, the microcontroller is programmed to read in the on-board buttons and display their corresponding binary value on the LCD. Knowing that the buttons are working correctly, the current sensor can be added. This requires the use of an ADC. To test the functionality of the ADC once programmed, the current sensor must be attached to the microcontroller and another device outputting a known current value. Knowing the current allows for proper calibration of the current sensor to the microcontroller.

The next step is to connect the digital rheostat to the microcontroller. Since the digital rheostat uses a contact closure connection, a simple high or low signal can be used to tell the digital rheostat what to do. The digital rheostat being used (model DS1869-100+) requires a low signal to be no more than 0.8 volts and high signal to be between 2.5 volts and 5 volts. To aid in sending the correct voltage value to the digital rheostats, a DAC will be used, which uses an SPI for communication with the microcontroller. In order for the resistance to change, the low or high signal sent to the digital rheostat must be maintained for a minimum of 1 millisecond and lasting no longer than 1 second, thus creating a pulse signal. The DS1869-

100+ requires a low signal to initiate a change in resistance and a high signal to cease change. Each pulse signal sent to the digital rheostat must have a minimum high signal of 1 millisecond. Figure 18 below shows the necessary timing for the DS1869-100+.

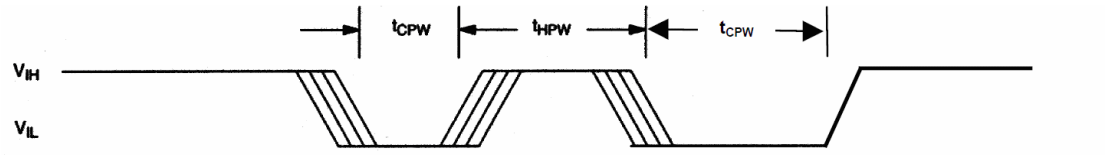

Figure 18: Repetitive Pulse Timing Diagram

In Figure 18, the diagram shows minimum necessary timing for high and low signals, where $t_{CPW} = t_{HPW} = 1$ millisecond. This means that the resistance will change every 2 milliseconds. To test the digital rheostat, once programmed to the microcontroller, a simple multi-meter is used to read the resistance being applied. The microcontroller is programmed using the on-board buttons to indicate if the resistance should be increased or decreased.

Once the current sensing device and digital rheostats have been individually programmed to work with the microcontroller, they are then programmed to work together.

Integration and Test Results

The full-wave rectifying power supply is set to output 5 volts to the converter. The converter is designed to be able to output from 0.8 volts to 30 volts. However, the converter built for the purposes of this project can only achieve a maximum of 5.1 volts on the output. Once the applied resistance at R_2 goes higher than 45kΩ, the converter maintains an output of approximately 5.1 volts. Though this does not pose a problem for the overall system, the converter specifications and requirements are not met. Table 6 below shows the output of the converter when used in conjunction with the full-wave rectifying power supply and manual potentiometer.

Table 6: Final Converter Output Voltage and Current Characteristics with Changing R_2

Vin (V)	R_1 (Ω)	R_2 (Ω)	Vout (V)
5	8,200	0	0.80
5	8,200	100	0.81
5	8,200	500	0.85
5	8,200	1,000	0.91
5	8,200	2,000	0.96
5	8,200	3,000	1.08
5	8,200	4,000	1.18
5	8,200	5,000	1.28
5	8,200	10,000	1.77
5	8,200	15,000	2.26
5	8,200	20,000	2.74
5	8,200	25,000	3.23
5	8,200	30,000	3.73
5	8,200	35,000	4.22
5	8,200	40,000	4.71
5	8,200	45,000	5.08

As can be seen from Table 6, the converter is “Bucking” the voltage properly, however once the input voltage is reached, the converter does not “Boost” as it should. There is a considerable amount of AC noise found within the converter, up to 100 millivolts. This could be one reason why the converter is not able to boost the output voltage as designed. The

excess noise could be a result of component placement within the enclosure. Connecting wires from the potentiometer to the converter, as well as a few others, are in close proximity of the transformer. Another concern is that the control chip being used, the LTC3780, is not sending the correct operating signals to the gates, thus restricting activation of boost mode. The LTC3780 control chip is designed to control the gates, thus allowing the converter to enter its various modes of operation. Since the converter is definitely working under the buck mode, the chip is sending the correct signals. That being the case, another cause could be incorrect connections between the chip and the gates. If the gates have been connected incorrectly, the control signals sent from the control chip will be useless. Even though the converter is not functioning as desired, it has no ill effects on the remaining systems. Figure 19 below shows the actual gate activity for each switch.

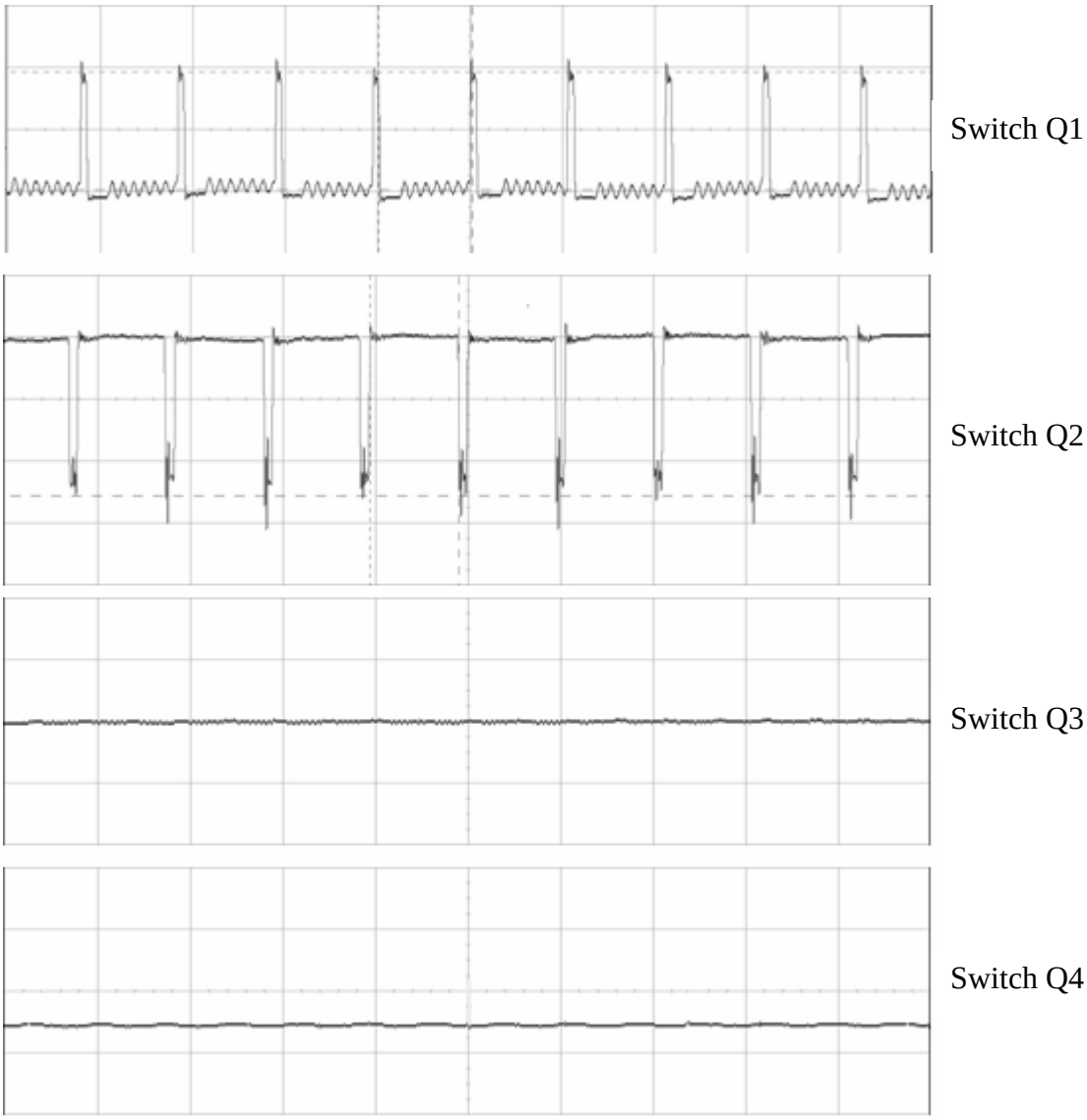

Figure 19: Actual Gate Switching Activity

As can be seen in Figure 19, switches Q1 and Q2 have obvious activity, switching on and off when necessary. Switches Q3 and Q4, however, appear to have no activity; neither switch is switching on or off. This shows that the converter is indeed in the Buck region of operation, taking the input voltage and lowering it.

Similar to the findings with the potentiometer, the use of the digital rheostat gives a voltage output as expected. However, the digital rheostat can only achieve an output up to 2.5 volts. The user can use the buttons on the Nexys I Development board to indicate an increase or decrease on the output, and the system responds accordingly.

Table 7: Final Converter Output Using Digital Rheostat

Vin (V)	R_1 (Ω)	R_2 (Ω)	Vout (V)
5	8,200	1.5k	0.94
5	8,200	3.13k	1.12
5	8,200	4.46k	1.25
5	8,200	5.91k	1.40
5	8,200	7.43k	1.55
5	8,200	9.18k	1.68
5	8,200	10.5k	1.82
5	8,200	11.92k	1.98
5	8,200	13.47k	2.15
5	8,200	15.05k	2.27
5	8,200	16.37k	2.38
5	8,200	17.86k	2.53

Table 7 above shows how incorporating the digital rheostat affects the over all system output. As can be seen, the digital rheostat used diminishes the available voltage output due to having only 64 tap points (meaning 64 positions the wiper can take). Since the digital rheostat only has 64 tap points, the converter can only output certain voltages. The digital rheostat used is capable of applying up 100kΩ of resistance. Having only 64 taps, the resistance is changed every $^{1}/_{64}{}^{th}$ in position. With the use of a manual potentiometer, the converter is only able to output a max of 5.1 volts, which corresponds to approximately 45kΩ across R_2. The digital rheostat is tested up to 45kΩ, however once past 18kΩ, the converter outputs only 2.5 volts. Though the use of the digital rheostat in place of a physical potentiometer follows expected output voltages on the converter, as were seen in simulations, the use of the digital rheostat has shown minimal instability issues. Once set, it is capable of maintaining its resistance, thus

maintaining a constant voltage output on the converter. However, this digital rheostat has been seen to slip, and not able to hold its set resistance value. This creates a difference of expected voltage output on the converter.

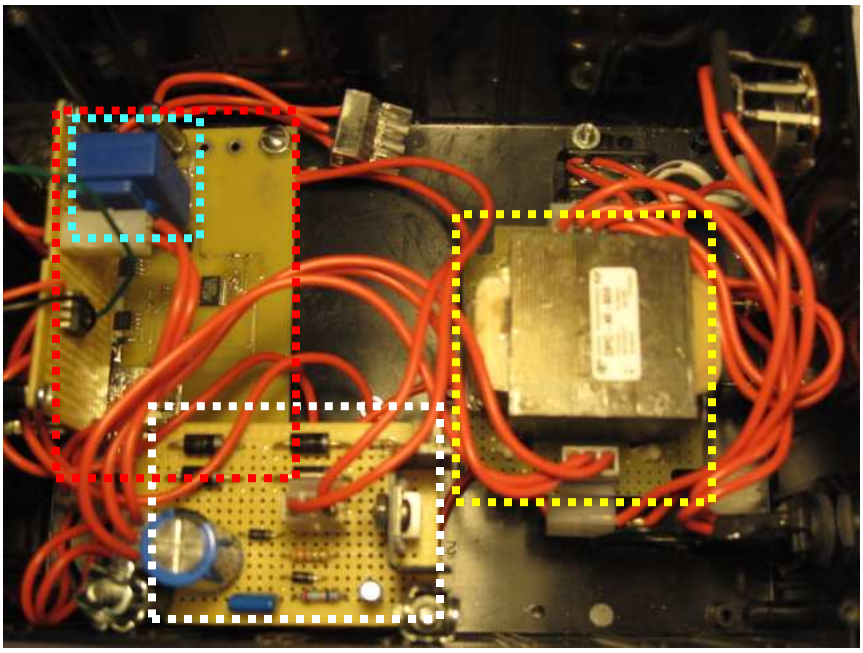

Figure 20: Completed Project in Enclosure

Figure 20 shows the completed project, which includes the power supply, converter, and current sensor. Not pictured in Figure 20 is the microcontroller unit, which is attached to the top of the enclosure, allowing for the necessary wires to be run through the lid. Boxed in yellow is the step down transformer, boxed in white is the full-wave rectifying DC power supply, boxed in red is the Buck-Boost converter, and boxed in light blue is the current sensor.

Figure 21: Microcontroller Unit, Top Mounted

Figure 21 shows how the microcontroller is mounted to the enclosure and how the feedback wires are fed. The attachment with the red, green, and black wires is the DAC, which connects the microcontroller output to the digital rheostat. The port with the red wire controls increasing the digital rheostat, while the port with the green wire controls decreasing it. The black wire is ground. The attachment with the red and black wires is the ADC, which connects the microcontroller input to the current sensor. The red wire is the input signal, while the black is ground.

Conclusions and Recommendations

As was previously mentioned, the Buck-Boost converter did not achieve the required output voltage as was specified. Though it worked well when simulated, actually building a working converter proved to be a challenging task. Another approach would have been to design and construct a Buck converter first, and test that with the system. Once a working Buck converter is built, then a Buck-Boost converter could be implemented. This alternate approach starts off with a less intricate process and allows for step-by-step expansion.

The digital rheostat used in this project was chosen based on ease of use. The DS1869-100+ uses contact closure connections, which means only a high or low voltage is used to make adjustments. The particular model chosen has only 64 tap positions. Allowing for more tap positions would increase precision on the output. This would mean more voltage output possibilities in the same range. Of course, different digital rheostats, and potentiometers, have different means of connections. Those with a larger number of tap points require an SPI to communicate with the microcontroller. This means more coding is involved in order to achieve functionality. However, the additional coding would have allowed for better precision on the output, a considerable option for future uses.

Though building each component individually was convenient for testing purposes, combining them all onto a single PCB would create a more direct connection, minimize excess noise (using cross-over wires to connect the DC supply to the converter, the converter to the current sensor, the rheostat to the converter, etc), and reduce cost. It would also create more free space within the enclosure and make it easier to access components.

Having one project member available to work on the overall project proved to be time-consuming and tedious. Considering all of the systems required to finish the project were, in large, constructed by individual components, it was very demanding. Having more people

available to work would have alleviated many concerns regarding the final product. Being able to delegate work means individual members can be responsible for and focused on each smaller aspect. Having multiple people work on the project also means more opportunity for discussion and suggestions and, needless to say, assistance in troubleshooting.

References

1. Linear Technology, "High-Efficiency, Synchronous, 4-Switch Buck-Boost Controller," LTC3780datasheet, 2005. [Online]. Available: http://cds.linear.com/docs/Datasheet/3780fe.pdf.
2. ExpressPCB, (2010). Homepage. [Online]. Available: http://www.expresspcb.com/
3. Digilent, Inc, (2010). Homepage. [Online]. Available: http://digilentinc.com/
4. Xilinx, (2010). Homepage. [Online]. Available: http://www.xilinx.com/
5. Digikey, (2010). Homepage. [Online]. Available: http://www.digikey.com/
6. "PCB – Copper Printed Circuit Boards." Robot Room. 2010. Available: http://www.robotroom.com/PCB.html
7. "PCB – Double-Sided Printed Circuit Boards." Robot Room. 2010. Available: http://www.robotroom.com/PCB2.html
8. Dr. Taufik. Introduction to Power Electronics, 7th Revision. California, San Luis Obispo, 2009
9. Franco, Sergio. Design with Operational Amplifiers and Analog Integrated Circuits, Third Edition. New York: McGraw-Hill, 2002
10. Monroe Diamond & Brian Vuong, "Energy Harvesting from Exercise Machines: Bike Buck-Boost Converter." Senior Project, California Polytechnic State University San Luis Obispo, 2010. DigitalCommons@Calpoly. Web. 2010. Available: http://digitalcommons.calpoly.edu/cgi/viewcontent.cgi?article=1054&context=eesp

Appendix A: Timelines

Figures 22 and 23 below show the projected and actual timelines, respectively.

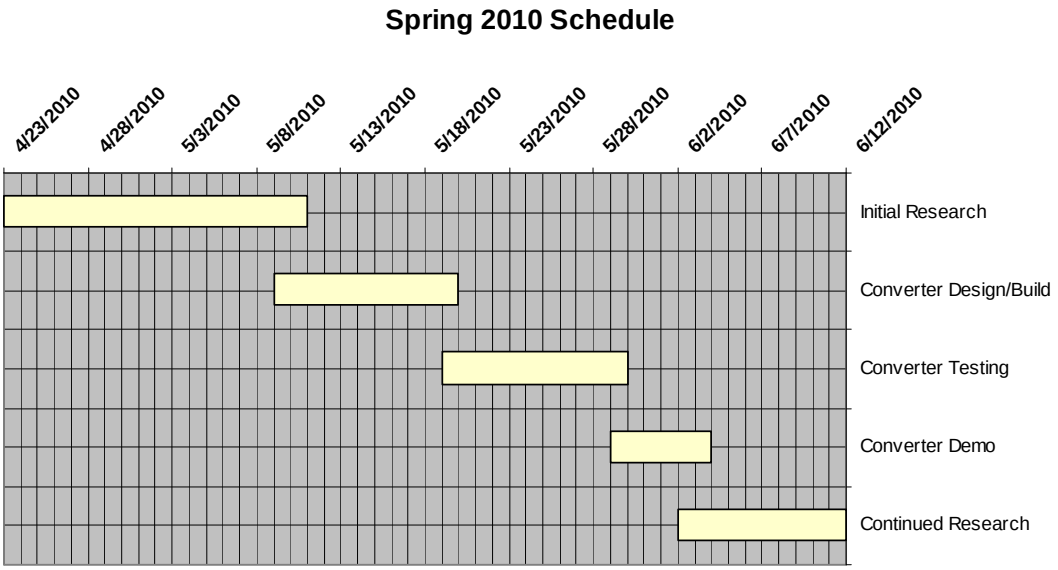

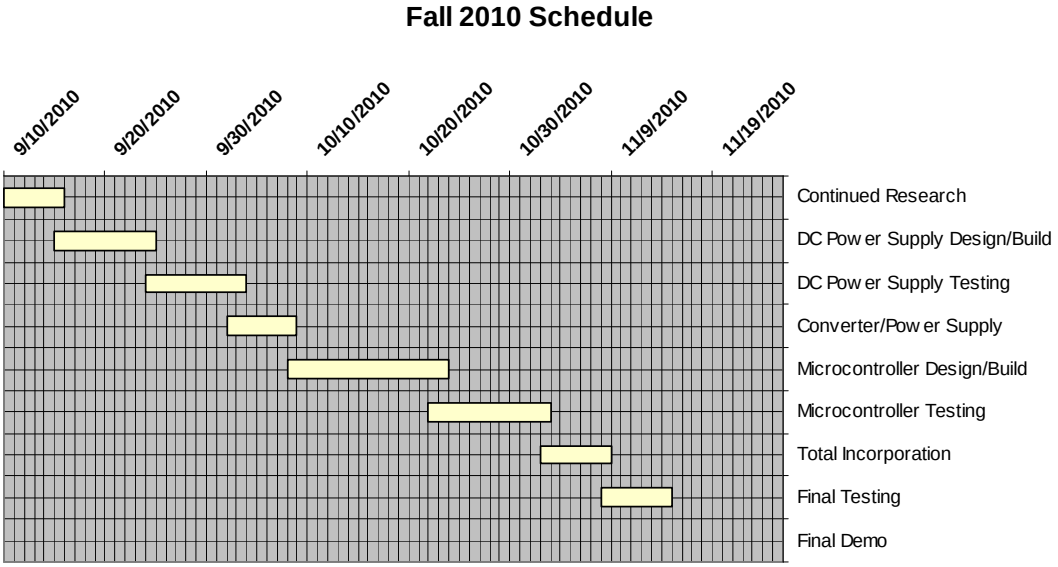

Figure 22: Projected Timelines for Spring and Fall, 2010

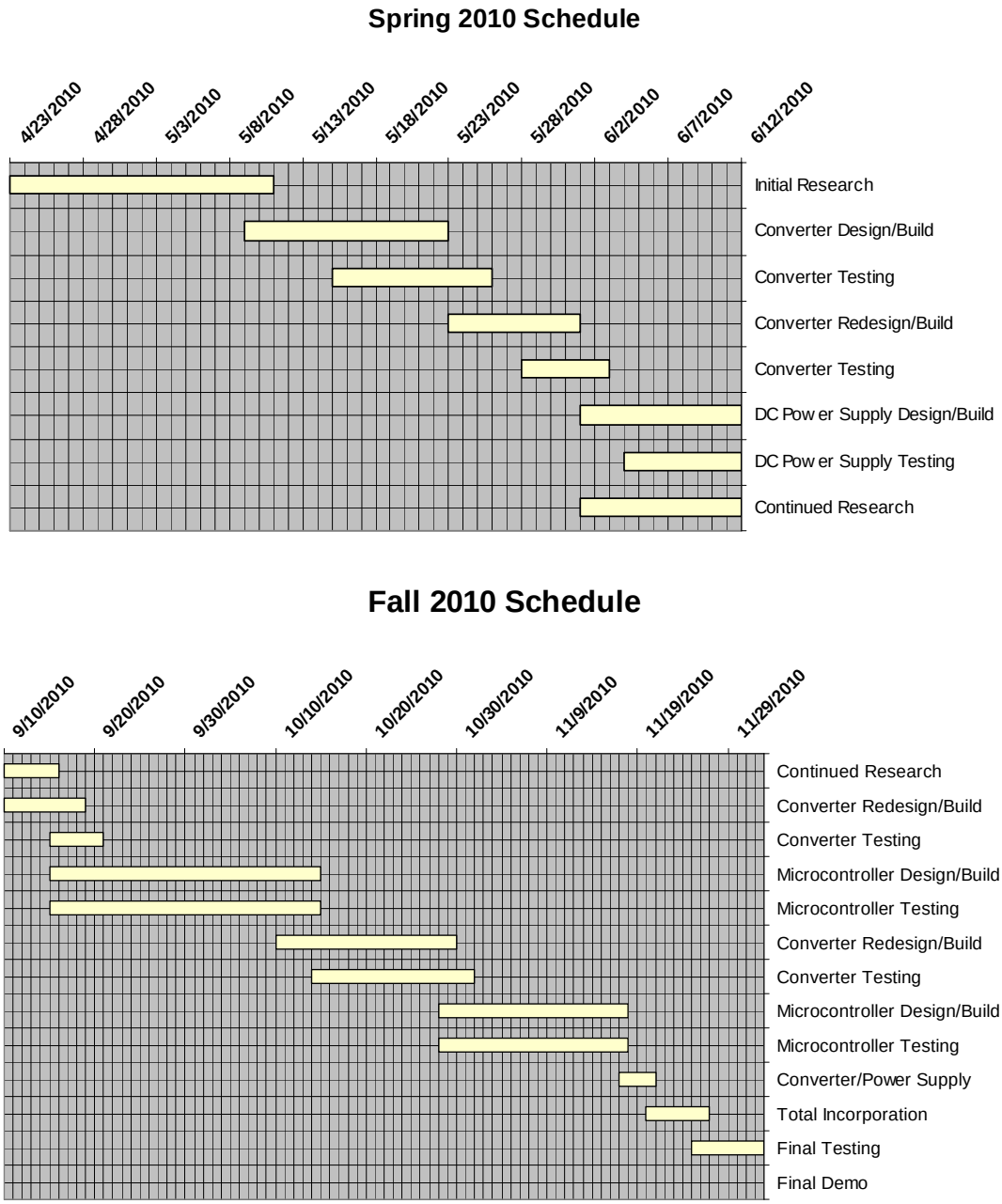

Figure 23: Actual Timelines for Spring and Fall, 2010

Appendix B: Bill of Materials

Table 8: Copper-Clad PCB Bill of Materials

Description	Value	Price Per Unit	Quantity	Total Price
C_1	470µF	$0.82	1	$0.82
C_2	22µF	$4.76	1	$4.76
C_3	4.7µF	$1.51	1	$1.51
C_4	.001µF	$0.78	1	$0.78
C_5	.01µF	$1.04	1	$1.04
C_6, C_7	.22µF	$0.96	2	$1.92
C_8	. 001µF	$0.78	1	$0.78
C_9	22µF	$4.76	1	$4.76
C_{10}	3.3µF	$1.38	1	$1.38
C_{11}, C_{12}	100pF	$0.32	2	$0.64
D_1, D_2	MBRS340	$0.72	2	$1.44
D_3	1N750	$0.46	1	$0.46
D_4, D_5	1N5819	$0.50	2	$1.00
L_1	4.7µH	$1.13	1	$1.13
R_1, R_2	.015Ω	$1.62	2	$3.24
R_3	100kΩ	$0.23	1	$0.23
R_4, R_5	100Ω	$0.23	2	$0.46
R_6	51kΩ	$0.23	1	$0.23
R_7	110kΩ	$0.23	1	$0.23
R_8	8.2kΩ	$0.23	1	$0.23
R_9	100kΩ	$0.23	1	$0.23
R_{load}	20Ω	$0.23	1	$0.23
$Q_1 – Q_4$	SI4840DY	$2.59	4	$10.36
U_1	LTC3780	$3.32	2 (min)	$6.64
8-Pin Adapter	PA-SOD3SM18-08	$5.00	4	$20.00
24-Pin Adapter	PA-SSD6SM18-24	$12.00	1	$12.00
Copper-Clad Board	20in x 20in	$13.45	1	$13.45
Etchant Solution	Ferric Chloride	$14.50	1	$14.50
Connection Socket	2-pin, 0.156in	$0.38	2 (min)	$0.76
Connection Socket	3-pin, 0.156in	$0.42	2 (min)	$0.84
Total				**$106.05**

Table 9: ExpressPCB Build Bill of Materials

Description	Value	Price Per Unit	Quantity	Total Price
C_a, C_b	0.22µF	$0.19	2	$0.38
C_{C1}	0.01 µF	$0.16	1	$0.16
C_{C2}	47pF	$0.42	1	$0.42
C_f	0.1 µF	$0.21	1	$0.21
C_{in}	22 µF	$0.17	1	$0.17
C_{in1}, C_{in2}, C_{in3}	3.3 µF	$0.94	3	$2.82
C_{out}	330 µF	$0.64	1	$0.64
C_{out1}, C_{out2}, C_{out3}	22 µF	$1.01	3	$3.03
C_{sense}	68pF	$0.42	1	$0.42
C_{ss}	0.022 µF	$0.07	1	$0.07
C_{stby}	0.01 µF	$0.16	1	$0.16
C_{vcc}	4.7 µF	$0.30	1	$0.30
D_1, D_2	B0540W	$0.48	2	$0.96
D_a	B340A	$0.50	1	$0.50
D_b	B320A	$0.66	1	$0.66
L	4.7 µH	$0.39	1	$0.39
Q_a – Q_d	SI4840DY	$2.59	4	$10.36
R_1	8.06kΩ	$0.04	1	$0.04
R_2	120kΩ	$0.02	1	$0.02
R_c	100kΩ	$0.02	1	$0.02
R_{in}	10Ω	$0.02	1	$0.02
R_{pll}	10kΩ	$0.02	1	$0.02
R_{pu}	1kΩ	$0.02	1	$0.02
R_{s+}, R_{s-}	100Ω	$0.02	2	$0.04
R_{sense}	15mΩ	$0.40	2	$0.80
U_1	LTC3780	$3.32	2 (min)	$6.64
PCB	ExpressPCB	$17.00	3 (min)	$51.00
Total				**$80.27**

Table 10: Final Build Bill of Materials

Description	Value	Price Per Unit	Quantity	Total Price
A/D Converter*	PMODAD1	$24.99	1	$24.99
Black Box Container		$6.99	1	$6.99
Buck/Boost Converter		$80.27	1	$80.27
Capacitor	10µF Electro	$0.17	1	$0.17
Capacitor	4700µF Electro	$1.49	1	$1.49
Capacitor	.01µF Film	$0.29	1	$0.29
Current Sensor	LAH 100-P	$26.50	1	$26.50
D/A Converter*	PMODDA2	$24.99	1	$24.99
Digital Rheostat	DS1869-100+	$6.39	1	$6.39
Diode	1N5401	$0.52	4	$2.08
Diode	1N4001	$0.30	2	$0.60
Female Banana Plug		$2.13	2	$4.26
Fuse Holder	20A, 1¼’ x ¼’	$2.99	1	$2.99
Fuses	1A, 250 volt	$0.4975	4	$1.99
Heat Sink	T0-220	$1.49	1	$1.49
Heat Sink Compound		$2.99	1	$2.99
Nexys Board*		$99	1	$99
PC Board, 371 hole		$1.99	3	$5.97
Power Cord, 10 Feet		$6.78	1	$6.78
Resistor	220Ω	$0.08	1	$0.08
Resistor	680Ω	$0.08	1	$0.08
Resistor	20kΩ	$0.08	1	$0.08
Switch	SPST Rocker	$2.99	1	$2.99
Test Potentiometer	5kΩ	$2.99	1	$2.99
Test Potentiometer	500kΩ	$3.99	1	$3.99
Transformer	DPC-40-600	$16.95	1	$16.95
Wire, 40 Feet	18 GA, 50 Volt	$6.50	1	$6.50
Voltage Regulator	LM317	$2.49	1	$2.49
Total				**$336.38**

*These components, though would contribute to the overall cost of the system, were already in possession, therefore can be removed from the total.

Appendix C: Microcontroller Software Code

The two important parts of the overall code are the Main loop and Interrupt Service Routine (ISR). The Main loop is infinite, which tells the microcontroller to keep running through this loop, as long as power is supplied to the unit. The ISR is where the important functions take place. An ISR is an interrupt generated by a piece of hardware. When the microcontroller receives an interrupt signal from the hardware, it stops what it is doing and transfers to the ISR function. Since the unit will be taking in data through the ADC continuously, and the DAC will be outputting when necessary, these interrupts are necessary for proper operation.

```
void myISR(){

   int r = 0;

   leds = getButtons();

   // Write value to GPIO
   XIo_Out32(XPAR_LEDS_BASEADDR, leds);

   // ADC data acquisition
   getADC();

   // Averages the input data, ie current, into a usable value
   averaging();

   // Acknowledges resets interrupt flag
   XIo_Out32(XPAR_TIMER_BASEADDR +0x00, XIo_In32(XPAR_TIMER_BASEADDR + 0x00));

   // Rheostat increase. Generates a 3.23 volt high, 0.6 volt low, 1 second pulse
   if(leds == 1){
      dOut = outVoltage2;
      leds = getButtons();
      for(r=0; r<40000; r++){
         sendDAC(dOut, dOut2);}
      dOut = outVoltage;
      r = 0;}

   else if(leds != 1){
      dOut = outVoltage;}

   // Rheostat decrease. Generates a 3.23 volt high, 0.6 volt low, 1 second pulse
   if(leds == 4){
      dOut2 = outVoltage2;
      writeOutput();
      writeOutput2();
      for(r=0; r<40000; r++){
         sendDAC(dOut, dOut2);}
      dOut2 = outVoltage;
      r = 0;}
   else{
      dOut2 = outVoltage;}

   sendDAC(dOut, dOut2);

   //Begin updating current
   //Tenth's digit
   i_disp[0] = (i_avg_disp%1000)/100 + 0x30;

   //Hundredth's digit
   i_disp[1] = (i_avg_disp%100)/10 +0x30;

   //Thousandth's digit
   i_disp[2] = i_avg_disp%10 + 0x30;
}
```

The ISR code above shows the microcontroller taking in data from the buttons, as well as the ADC. It then tells the microcontroller what to do based on the input. When appropriate, the

microcontroller outputs to the digital rheostat, thus increasing or decreasing the resistance applied to the converter. This, in turn, causes the output voltage to increase or decrease.

```
main(){

    //Initialize LCD Screen
    initializeScreen();

    //Initialize Timer; Sets timer control register to reload count and start
    XIo_Out32(XPAR_TIMER_BASEADDR, 0x1F2);
    XIo_Out32(XPAR_TIMER_BASEADDR, 0x1D2);

    //Enable Interrupts
    microblaze_enable_interrupts();

    while(1){
    }

}
```

The main loop does nothing more than initialize and setup hardware components. It also enables interrupts, thus allowing the microcontroller to accept interrupts.

Appendix D: Analysis of Senior Project Design

Functional Requirements

This project is a DC Power Supply that supplies a constant voltage to current ratio by digital means. It allows for an output of up to 5.1 volts and 251 milliamps on the converter

Primary Constraints

Several issues arose throughout the duration of this project. One such concern was determining how to use a microcontroller to change the voltage output on the converter. Initial strategies were to feed in a separate signal that would allow for a change in frequency or duty cycle. However, upon closer examination and further research of the chosen controller chip, any outside signal would not have the desired effect on the output; it would merely change how the chip itself operates.

Perhaps the most challenging aspect was finding and incorporating parts that would meet specifications and be able to function with the overall system. For example, one limiting factor is part availability, both locally and by mail-in order. Finding a part that allows the necessary amount of current or voltage to pass through is only good if it is available for use.

Economic

Original costs were thought to be around $70 for the converter alone. The rest of the project, including the converter but excluding components already in hand (such as the Nexys system and associated peripheral attachments), was thought to be approximately $130-$140. However, the true cost of only the final converter built was $80.27. The rest of the project, again including the converter but excluding components already in hand, resulted in a grand total of $187.40, approximately $40-$50 more than was expected. All Bill of Materials lists

can be found in Appendix B. It should be noted that this does not include equipment used in the development and testing processes. Some of the equipment includes a PC with the Xilinx Embedded Development Kit and in lab test equipment, such as DC Power supplies, multi-meters, and oscilloscopes.

This project was originally planned to use both the Spring and Fall quarters of 2010, achieving a working prototype by the end of the seventh week of the final quarter. Though both quarters have been used diligently, the time it has taken to finish individual systems and incorporate them into the final design has taken longer than expected. The conclusion of this project's work culminated at the end of the last week of the final quarter. Projected and actual project timelines can be found in Appendix A.

Commercial Manufacturing

Various factors have to be taken into consideration when thinking about manufacturing and marketing of any product. In this case, the total cost for parts to construct this device totaled $336.38. This, however, does not include the man hours needed to research and develop the design, build, and test the prototype. For one person working roughly 5-6 hours a day, which includes any and all travel time, for 5 days a week over a period of 18 academic weeks (i.e. approximately two university quarter terms) gives roughly 450-540 hours in labor. Assuming an hourly wage of $14-$16 is earned, that would equate to $6,300-$8,640 in man hours towards the final completion of this product. Considering the cost to produce this device, the estimated overall cost for an initial production of one unit would be approximately $7,806.38. This, of course, does not include overhead costs, such as utilities required to run the equipment necessary to produce this product.

Given this data, a sale of at least 20 units at $390.32 would be required to offset the cost of the initial production. To see a profit within the first year, sales in excess of these 20 units would be needed. Each subsequent year would yield a higher profit because the initial research and development costs are not included, as they are considered one-time expenses.

Environmental

The final product would be very similar in manufacturing to a standard DC power supply. The difference would be the incorporation of the microcontroller functionality, which requires the use of additional resources to manufacture these supplemental parts. As with any electronic device, power is consumed. Making sure the most efficient components and means of production are used can minimize the impact this consumption has on the environment. Another concern is with improper disposal. This could be resolved by providing a proper means and education in which to dispose of or recycle the products for the general public, as well as the industrial sector.

Manufacturability

For manufacturing purposes, placing all components on a single PCB would create fewer connecting wires. A simplified version of the current project would result in a single board containing all of the necessary components. However, if the power supply was composed of multiple systems, as in this project, it could still be manufactured; the manufacturer would only need to make the systems separately. Using either a single or multiple PCBs would still allow a manufacturing process to be planned without much difficulty.

Sustainability

Since this device does not have any moving parts, there is no serious maintenance required. In the event of device failure or overheating, certain easy steps could be taken to troubleshoot. For example, making sure that the LM317 (voltage regulator) and heat sink have ample heat sink compound between them, allowing for proper heat dissipation.

The biggest issue associated with any DC power supply comes with how it is used. Generally, these devices are left on during inactivity. This means excess power is being drawn and used unnecessarily by the power supply, which is no longer connected to anything.

Upgrading this product would be fairly easy to do. Such upgrades could consist of changing out the converter for another that reaches a higher voltage range. Another consideration is using a different current sensor, one that detects more current, or has a faster response time. For purposes of this project, each component was made as modular as possible, meaning few point-to-point soldering connections were made. Most connections are used with jumper cables, connecting individual components together. For this reason, swapping components out would be fairly easy to accomplish. If the design were to incorporate a single board with all components on it, then simply de-soldering a single component is all that would need to be done, unless upgrading the converter. If this is the case, then upgrading the converter would require changing out the whole unit, which would not be cost effective in the end.

Ethical

DC power supplies are used by numerous people for everyday functions. As such, there are minimal ethical concerns associated with this device, be it in design, manufacturing, or simple use. The biggest concern would be with improper disposal of the product. Most electronic components or comprised of elements like aluminum, mercury, lead, and other

toxic materials, which can leak into the ground affecting the surrounding land and water sources. It is for this reason that all electronic equipment, not just this product, must be disposed of properly.

Health and Safety

This product would have no more health concerns than any other DC power supply on the market. It does not have communication abilities, so there would be no radiation emitted (such as with cell phones). Certain elements that are used to compose the power supply (lead, mercury, etc.) may have health side effects after prolonged exposure. However, the amount of these materials is so insignificant and contained within a non-hazardous container (i.e. “black box”), that when properly maintained, the device is no more a threat than other common household items. Therefore, a properly operating power supply should not pose health risks due to a person’s spatial relationship with it.

A general safety concern would be to make sure that this device cannot cause harm to any one who operates it. This means making sure any components giving off excess heat have proper heat sinking, all wires are seated and connected correctly, and that any exposed wiring has been properly heat shrunk, minimizing the chance of electric shock should a user inadvertently touch it. This, again, is why the final product has been put into a “black box” enclosure, thus keeping all electrical connections out of sight and contact of any user.

Social and Political

This type of product would be used mostly for design and testing purposes of new technology. The device, by itself, has no purpose other than to supply power to small electronics; therefore, it would have few, if any, social or political concerns. The design,

manufacturing, and use of this product are so commonplace and accepted that it would have few ethical and health concerns.

Development

Perhaps the biggest impact this project has had is in my knowledge and understanding of embedded systems and basic circuits. Having taken CPE 329, the embedded systems class, we had the opportunity to learn quite a lot in regards to the C programming language and its use in embedded systems technologies. My biggest weakness was not thoroughly understanding flagging and addressing of certain peripheral devices and the SPI core. Even though those were topics addressed in class, work on this project has made me more aware of how they function and their practical applications.

Another interesting aspect came from working with the AC to DC conversion. Again, these are subjects learned in class, but until they are witnessed as real world applications, it is hard to appreciate their purpose. Not only seeing my design come together, but understanding each component and its function has been invaluable in this learning process.