Proceedings of

1992 NATIONAL WASTE PROCESSING CONFERENCE

FIFTEENTH BIENNIAL CONFERENCE

Solid Waste Processing into the 21st Century

Papers presented at

THE 1992 NATIONAL WASTE PROCESSING CONFERENCE
DETROIT, MICHIGAN
MAY 17–20, 1992

Sponsored by

THE SOLID WASTE PROCESSING DIVISION, ASME

THE AMERICAN SOCIETY OF MECHANICAL ENGINEERS
345 East 47th Street • United Engineering Center • New York, N.Y. 10017

GRAPHICAL INTEGRATED WASTE MANAGEMENT MODEL FOR PUERTO RICO

SAMUEL A. VIGIL
Civil and Environmental Engineering Department
California Polytechnic State University
San Luis Obispo, California

HILARY M. THEISEN
Brown and Caldwell Consultants
Walnut Creek, California

ABSTRACT

The application of STELLA, a commercially available, graphically based simulation language for the Macintosh computer, to solid waste facility planning is described. This paper discusses a STELLA model which was developed for the Commonwealth of Puerto Rico Solid Waste Management Authority (SWMA). The model simulates the existing solid waste management system in Puerto Rico and also the proposed system of regional landfills, transfer stations, and waste-to-energy plants. The model incorporates population projections for all 78 municipalities in Puerto Rico from 1990 to 2010, solid waste generation factors for all municipalities, data on remaining life for the existing landfills, and projected startup time for the new landfills and waste to energy plants. The model is being used as a planning tool by SWMA to manage time phased procurement of these new facilities.

INTRODUCTION

The Commonwealth of Puerto Rico Solid Waste Management Authority (SWMA) contracted with Brown and Caldwell Consultants to prepare a computer model for tracking solid wastes. The model is programmed in the STELLA computer language on the Macintosh microcomputer. As part of an earlier contract, Brown and Caldwell had assisted SWMA in preparing a Site Facility Plan which summarized the existing solid waste management system in Puerto Rico and presented a new system of regional landfills, transfer stations, and waste-to-energy plants. This paper describes a computer model based on that Plan. The model incorporates population projections for all 78 municipalities in Puerto Rico from 1990 to 2010, solid waste generation factors for all municipalities, data on remaining life for the existing landfills, and projected startup time for the new landfills and waste-to-energy plants.

THE STELLA LANGUAGE

STELLA is a commercially available programming language which runs on the Macintosh computer. It combines features of a computer aided design program, a spreadsheet, and a conventional programming language. STELLA is widely used in scientific applications to model complex systems. The most important feature of STELLA is that it is programmed graphically as a logic diagram. The program is generated by the logic diagram. Thus the diagram and the program are always in agreement. In conventional programming, the logic diagram (or flowsheet) is used by programmers as an outline. Since it is a paper document, the finished program may not actually match the logic diagram. Spreadsheets, although easy to construct, are difficult to correct since the programming logic is hidden behind the spreadsheet cells. With a STELLA program, the

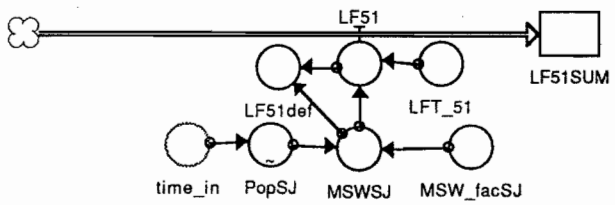

FIG. 1 SAN JUAN LOGIC DIAGRAM
(Existing System)

logic diagram always accurately represents the structure of the model. The logic diagram can be easily understood by nonprogrammers.

STELLA is programmed by constructing a flowsheet on the computer screen using graphical elements as shown in Fig. 1, the logic diagram for the municipal solid waste (MSW) flow in the City of San Juan. The rectangle represents a "stock" or accumulation of material; in this case, the total MSW deposited at landfill 51. The circles represent "converters", algebraic expressions or constants. The arrow with double lines represents a "flow" of materials. The associated circle contains algebraic logic to control the flow. Finally the single line arrows represent logical connections between the flowsheet elements. Thus, the population of San Juan (PopSJ) affects the yearly MSW generation in San Juan (MSWSJ).

STELLA MODEL — EXISTING MSW SYSTEM

The STELLA model for Puerto Rico was prepared in two parts: *(a)* a simulation of the existing system; and *(b)* a simulation of the proposed system. The STELLA logic diagram for the existing San Juan MSW system is shown in Fig. 1. It is typical of the other 78 municipalities modeled.

San Juan Logic Diagram

The converter (circle) labeled PopSJ is a graphical function which contains the population data for San Juan. It is linked to a "ghost" converter, or copy, labeled time_in. This provides time input to the model from 0 to 20 years in 1 year increments. The PopSJ function is saved in the STELLA model as an equation:

```
PopSJ = graph(time_in) (0.0,415399),
(5.00,404144), (10.0,393858), (15.0,382210),
(20.0,370562)
```

The equation shows that the population at year 0 = 415,399 and so on. STELLA interpolates the yearly values. Graphical functions can also be drawn freehand. STELLA automatically converts the graph into numerical data.

The converter labeled MSWSJ, calculates the municipal solid waste (MSW) generated yearly in San Juan (in tons/year) using the equation below:

```
MSWSJ = MSW_facSJ*(300/2000)*PopSJ
```

The equation calculates MSWSJ by multiplying the population (PopSJ) by the daily MSW generation in lb/cap-day (MSW_facSJ). The arithmetic equation (300/2000) converts lb/cap-day into tons/day (assuming 300 days/year production). MSW_facSJ is a constant, 4.9 lb/cap-day. (Note: These constants and assumptions were specified by the client, SWMA. Any user specified days production per year and MSW generation rates can be used.)

The MSW "flows" to the landfill which is shown as the rectangle or stock labeled LF51SUM (for landfill #51). The flow is controlled by the converter LF51 which contains the equation:

```
LF51 = IF (LFT_51 = 0) OR (LFT_51-TIME ≤ 0)
THEN 0 ELSE MSWSJ
```

This is a logical equation which states "If the landfill life remaining for landfill #51 (LFT_51) is equal to 0, or if the landfill life remaining minus the current model time (TIME) is equal to or less than 0, then, the MSW going to landfill #51 (LF51) is 0; otherwise it is equal to the MSW generated in San Juan that year (MSWSJ)." The constant LFT_51 equals 4; thus for years 0, 1, 2, and 3, LF51 will equal MSWSJ, and the MSW will flow to landfill #51. At year 4 (i.e., 1994), no MSW will flow to the landfill.

The converter LF51def contains the equation:

```
LF51def = MSWSJ − LF51
```

If LF51 is equal to 0 (as it would be in years 4 on), then the landfill deficit (LF51) is equal to the MSW generated that year (MSWSJ). The deficit represents MSW which is in excess of the projected life of the landfill.

For ease in comparing the simulation of the existing Puerto Rico MSW system with the proposed system, the 78 municipalities were grouped into the same 20 zones which will be used in the proposed system. San Juan is the only municipality located in Zone 1. The

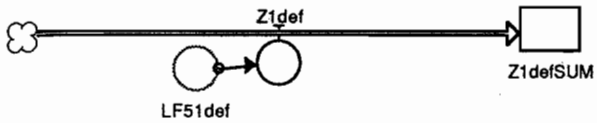

FIG. 2 ZONE 1 DEFICIT SUMMARY
(Existing System)

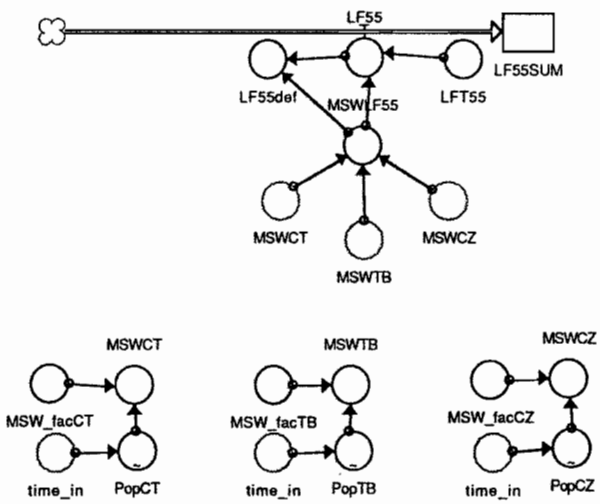

FIG. 3 LANDFILL 55 LOGIC DIAGRAM
(Existing System)

logic diagram shown in Fig. 2 adds all the deficits generated in Zone 1.

The converter Z1def contains the equation:

Z1def = LF51def

The stock Z1defSUM contains the equation:

Z1defSUM = Z1defSUM + dt* (Z1def)
INIT(Z1defSUM) = 0

This equation calculates the accumulated sum of the Zone 1 deficit as the time increment is changed (i.e., from year 0 to year 1, etc.). The second line of the equation initializes the sum to 0 at time 0.

Zone 2 Logic

Zone 2 is more complex than Zone 1 as it contains a number of municipalities. The logic for each municipality is similar to San Juan except that data specific to that municipality is supplied. A more complex logic diagram (Fig. 3) is required for the situation when more than one municipality is using a landfill. For example

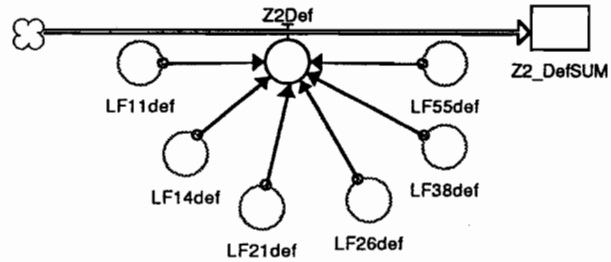

FIG. 4 ZONE 2 DEFICIT SUMMARY
(Existing System)

landfill 55 is used by three municipalities, Catano (CT), Toa Baja (TB), and Corozal (CZ):

The three logic diagrams shown below the main diagram calculate MSW in tons/year for each municipality. The equations are similar to those used for San Juan. For example the Catano equations are:

MSWCT = MSW_facCT*(300/2000)*PopCT
MSW − facCT = 4.9
PopCT = graph(time_in)
(0.0,26691), (5.00,27177), (10.0,27808), (15.0,28313), (20.0,28818)

The main logic diagram adds the MSW for the three municipalities together and calculates the landfill deficit for landfill #55 and the landfill sum:

MSWLF55 = MSWCT + MSWTB + MSWCZ
LF55 = IF (LFT55 = 0) OR (LFT55 − TIME ≤ 0)
THEN 0 ELSE MSWLF55
LF55def = MSWLF55 − LF55
LFT55 = 0
LF55SUM = LF55SUM + dt* (LF55)
INIT(LF55SUM) = 0

Since there are six landfills in Zone 2, the logic diagram is more complex than for Zone 1 (see Fig. 4). The landfill deficit converters (i.e., LF11def) are shown as "ghosts" to transfer the data from other portions of the logic diagram. The equations for the logic diagram are shown below:

Z2_DefSUM = Z2_DefSUM + dt* (Z2Def)
INIT(Z2_DefSUM) = 0
Z2Def = LF11def + LF14def + LF21def + LF26def + LF38def + LF55def

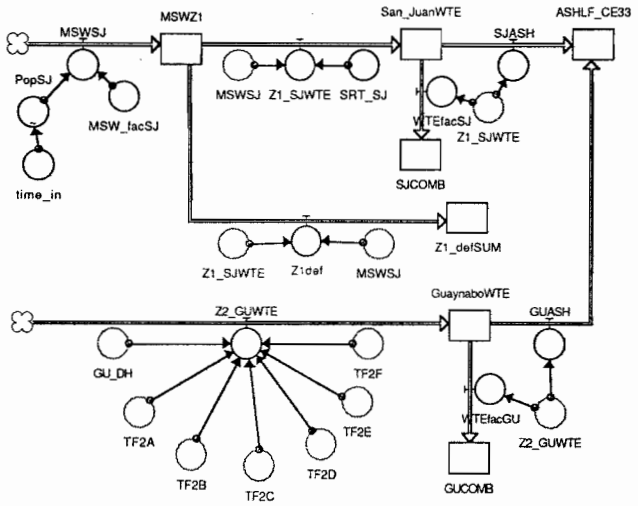

FIG. 5 SAN JUAN AND GUAYNABO LOGIC DIAGRAMS (Proposed System)

STELLA MODEL — PROPOSED SYSTEM

The Solid Waste Management Authority (SWMA) has proposed that many of the existing landfills be closed and that a regionalized system of 20 solid waste zones be developed. The zones will incorporate state-of-the-art landfills, transfer stations, and in some cases waste-to-energy plants. At this stage of development, the system does not incorporate recycling, composting, and other landfill diversion technologies, but as SWMA's solid waste strategy changes, the model can easily be modified to reflect these diversions, and the resultant extension of landfill life.

The logic diagrams for the proposed system are more complex than the existing system because they incorporate waste-to-energy plants and a series of transfer stations. The logic diagram for Zone 1, the City of San Juan is representative of the other Zones and will be discussed.

San Juan Logic Diagram

The logic diagram is shown as Fig. 5. The waste flow is either towards the waste-to-energy plant or to the deficit converter. The converter Z1__SJWTE contains the following logic:

Z1_SJWTE = IF (SRT_SJ = 0) OR
(SRT_SJ − TIME ≤ 0) THEN MSWSJ ELSE 0
SRT_SJ = 4

The logical equation Z1_SJWTE routes the waste stream to San_JuanWTE or to Z1def by comparing the value of SRT_SJ (the start up time for the San Juan waste-to-energy plant) with the Time running in the Model. If Z1_SJWTE is equal to 0, then the deficit equation below applies:

Z1def = MSWSJ − Z1_SJWTE

If Z1_SJWTE is equal to MSWSJ, then the equations below balance the waste stream between ash (SJASH) and combustion (SJCOMB). It was assumed that 25% of the waste stream would be converted to ash.

SJASH = Z1_SJWTE*.25
Z1_SJWTE = IF (SRT_SJ = 0) OR
(SRT_SJ − TIME ≤ 0) THEN MSWSJ ELSE 0
WTEfacSJ = Z1_SJWTE*.75

Similar logic is used for the Guaynabo waste-to-energy plant which shares a common ash landfill with the San Juan waste-to-energy plant.

Zone 2 Logic

Zone 2 is more complex than Zone 1 and is typical of the rest of the model. Zone 2 utilizes a waste-to-energy plant which is fed by six transfer stations and direct haul from the municipality of Guaynabo (see Fig. 5).

Note that the waste streams from the six transfer stations are added together before entering the Guaynabo WTE plant. A logic diagram is given for each municipality separately. They are added together into transfer station flows. For example, the MSW produced in Dorado is fed into Transfer Station 2A which feeds the Guaynabo WTE. The logic diagram for Dorado and Transfer Station 2A are presented in Fig. 6 and the equations are given below:

PopDO = graph(time_in)
(0.0,32643), (5.00,36965), (10.0,41992),
(15.0,47376), (20.0,52760)
MSWDO = MSW_facDO*(300/2000)*PopDO
MSW_facDO = 1.8
DO_TF2A = IF (SRT_GU = 0) OR
(SRT_GU − TIME ≤ 0) THEN MSWDO ELSE 0
DOdef = MSWDO − DO_TF2A
SRT_GU = 6

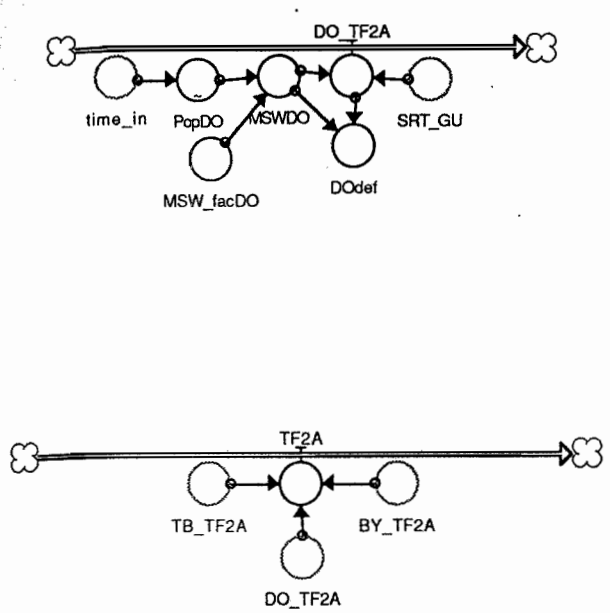

FIG. 6 DORADO AND TRANSFER STATION 2A LOGIC DIAGRAMS
(Proposed System)

The equations route the waste stream to the transfer station 2A or to deficit depending on the value of Time relative to the start up time of the Guaynabo WTE (SRT__GU). Finally the waste is routed to transfer station 2A by the equation:

$$TF2A = TB_TF2A + DO_TF2A + BY_TF2A$$

USES OF THE STELLA MODEL

The STELLA model developed for Puerto Rico is being used to help schedule the design and construction of the new landfills, transfer stations, and waste-to-energy plants recommended in the Site Facility Plan. One of the most important uses of the model is the monitoring of the timing and magnitude of deficits as the existing landfills reach capacity. The deficits show which municipalities in the system have the most critical need for new facilities.

Output from the model can be in graphical form or as spreadsheet compatible tables which can be transferred to other Macintosh applications such as spreadsheets (EXCEL) and word processors as ASCII files. Through the use of commercially available translator programs such as MacLink-PC, output data can also be transferred to standard MS-DOS applications such as LOTUS 1-2-3 and WORDPERFECT. For example, the deficit predictions can be transferred to the Prima-Vera construction project scheduling program which is widely used on MS-DOS computers. Consideration is being given by the software developer to producing a MS-DOS or WINDOWS version of STELLA to run directly on IBM and IBM-compatible PCs.

OTHER SIMULATION LANGUAGES

EXTEND is another graphical simulation language for the Macintosh computer. EXTEND uses libraries of "blocks" which can be used to represent processes rather than the standard set of stocks and converters as in the STELLA language. Libraries for chemical reactions, engineering design, hydraulics, environmental modeling, and other science and engineering applications are included. Users can also develop custom blocks which can be reused in other models (similar to the use of subroutines in conventional programming languages). A WINDOWS or MS-DOS version of EXTEND is planned for later this year.

ACKNOWLEDGMENTS

The authors gratefully acknowledge the assistance of Luis Diez and Fidel Sanchez of Quiñones, Diez, Silva Y Asociados, Hato Rey, Puerto Rico, and the Commonwealth of Puerto Rico Solid Waste Management Authority. STELLA is a trademark of High Performance Systems of Hanover, New Hampshire. EXTEND is a trademark of Imagine That, Inc. of San Jose, California.

Keywords: Modeling; Simulation; Computer Programs; Integrated Waste Management