A TRANSIENT ELECTROMAGNETIC FLOWMETER

P. J. Lefebvre
Naval Underwater Systems Center
Newport, Rhode Island

W. W. Durgin
Worcester Polytechnic Institute
Worcester, Massachusetts

ABSTRACT

An electromagnetic flowmeter was developed to measure transient flows with a frequency response of 60 Hz. The approach taken was to develop suitable electronics to replace the electronics of a commercially available electromagnetic flowmeter normally used for steady-state operation. Use of the commercially available flowmeter body, which includes the magnetic coils, core, and signal electrodes, provided a relatively economical means of fabricating the transient flowmeter. A transient flow calibration facility consisting of a free-falling water column was also designed and built. Results of the calibrations are presented and show that the flowmeter can accurately measure transient flows up to the maximum observed acceleration of approximately 1 g.

NOMENCLATURE

A	Cross-sectional area
B	Magnetic flux density
D	Meter diameter
E	Voltage generated at electrodes
K	Meter calibration factor
L	Effective distance between optical pairs
V	Cross-sectional average fluid velocity
W	Weight
ρ	Fluid weight density
σ	Standard deviation

INTRODUCTION

In the study of transient pipe flows, a need exists for the accurate measurement of the mean volumetric flow rate as a function of time. To date, very few flowmeters have been built that have the capability to measure transient flows. In addition, to the authors' knowledge, there are no commercially available flowmeters that can measure transient flow rates with a substantial frequency response.

A few special-purpose meters have been developed over the past 25 years that have had some transient flow measurement capabilities. In 1950, Arnold (1) described an electromagnetic flowmeter for small flow rates that responded to very short transients of 0.001 second in duration. Since a circular cross section proved unsatisfactory for the design, a small rectangular cross section of 0.48 x 1.58 cm was chosen. In 1960, Iwanicki and Fontaine (2) described an electromagnetic flowmeter, which was also designed to respond to very short transients of low flow rates. The meter, with a 1.2-cm diameter, could not be operated for more than a few seconds due to polarization of the flowing liquid at the signal electrodes. In each of the references, it was shown that the meters responded to large flow transients. Unfortunately, the facilities used to validate meter performance could not provide information on the accuracy of the flowmeter output.

To fulfill the need for accurate transient flow measurement during future experimental studies, the Naval Underwater Systems Center (NUSC) developed the transient flowmeter discussed herein. This electromagnetic-type meter has the capability to accurately measure transient flows with a frequency response to 60 Hz. The meter has a 5-cm diameter and can be used for steady-state flows and transient flows of either short or long duration. It also can operate accurately over a 30:1 flow rate range. To evaluate the flowmeter's accuracy, a transient calibration facility was designed by NUSC and the Worcester Polytechnic Institute (WPI) and fabricated at WPI.

FLOWMETER DESCRIPTION

Electromagnetic technology was chosen as the basis for the transient flowmeter because of inherent fast response to transients and the general insensitivity of electromagnetic flowmeters to changes in velocity profile.

This paper is declared a work of the U.S. Government and is not subject to copyright protection in the United States.

By using a weighting function, Shercliff (3) showed mathematically that the signal generated at the electrodes represents the average velocity for axisymmetric profiles. Reinhold (4) presented experimental data that showed errors of less than 0.5% when large unsymmetric flow disturbances were placed only five pipe diameters upstream of an electromagnetic flowmeter. Typical disturbances were a concentric orifice plate with 50% blockage and a segmental orifice with a 50% blockage.

The electromagnetic flowmeter is based on Faraday's law of induction. As a conducting fluid passes through a magnetic field, an electric voltage is generated in a plane perpendicular to the plane of the magnetic flux vector and the conducting fluid's velocity vector. The generated potential E (volts) given by Faraday's law is shown in Eq. (1) as

$$E = KDBV, \qquad (1)$$

where K is the meter's calibration factor, D is the distance between signal electrodes (or meter diameter), B is the magnetic flux density, and V is the cross-sectional average fluid velocity.

The approach taken in the development of the flowmeter was to utilize as much of a commercially available electromagnetic flowmeter as was feasible. The final version of the transient flowmeter, therefore, consists of the flow tube (or body) portion of a Foxboro Co., ac-powered, electromagnetic flowmeter and the NUSC-designed electronics transmitter. The flow tube, as shown in Fig. 1, consists of the magnetic coils and core (which generates the magnetic flux), and the signal electrodes mounted flush with the inner wall of a 5-cm-diameter fiberglass tube.

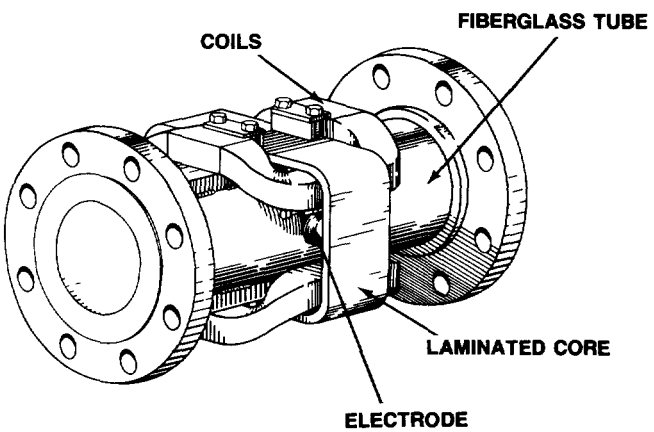

Fig. 1. Flowmeter Body

In operation, the magnetic field is powered by line voltage and, thus, oscillates sinusoidally at 60 Hz. The electronic unit samples the output voltage from the signal electrodes during each cycle and, subsequently, provides both an analog and a digital signal corresponding to the instantaneous flow rate. Since the magnetic field is cycled and not maintained at a constant dc value, polarization of the fluid at the signal electrodes does not occur and the flowmeter can be operated for an indefinite period of time.

Changes in the magnitude of the induced magnetic flux due to fluctuations in line voltage are compensated by referencing the voltage from the signal electrodes to the inductivity induced voltage in a reference coil located on the external wall of the flow tube in the vicinity of the magnetic coils. The electronic circuits were designed to operate at frequencies up to approximately 1000 Hz. However, at these higher frequencies, the flow tube itself would have to be redesigned.

CALIBRATION FACILITY

The purpose of the calibration facility at WPI was to establish the accuracy to which the flowmeter could measure transient volumetric flow rates under accelerations up to 1 g. The general concept of the facility was to accurately measure the transient velocity of a free-falling vertical column of water to which the output from the transient flowmeter could be compared. The velocity of the water column (calibration velocity) was measured by monitoring the rate of change in elevation of the free surface of the column.

As shown in Fig. 2, the water column is contained within a clear acrylic pipe having an inside diameter of 5 cm. The transient flowmeter was installed at the lower end of this pipe. Each test was initiated by manually opening a ball valve placed below the flowmeter. To measure the free surface velocity, a total of 96 photo emitter/photo diode optical pairs were distributed every 5 cm along the lowermost 480 cm of the acrylic pipe. As the surface of the water column passed a sensor station, a change in the intensity of light transmitted from the photo emitter to the photo diode occurred, resulting in a sharp jump in the voltage generated at the photo diode. This change in voltage level was used to trigger a flip-flop in the facility's electronic circuitry to which all of the optical sensors were multiplexed. The analog output of this electronic system was a square wave with a varying half-period equal to the time between consecutive trigger pulses.

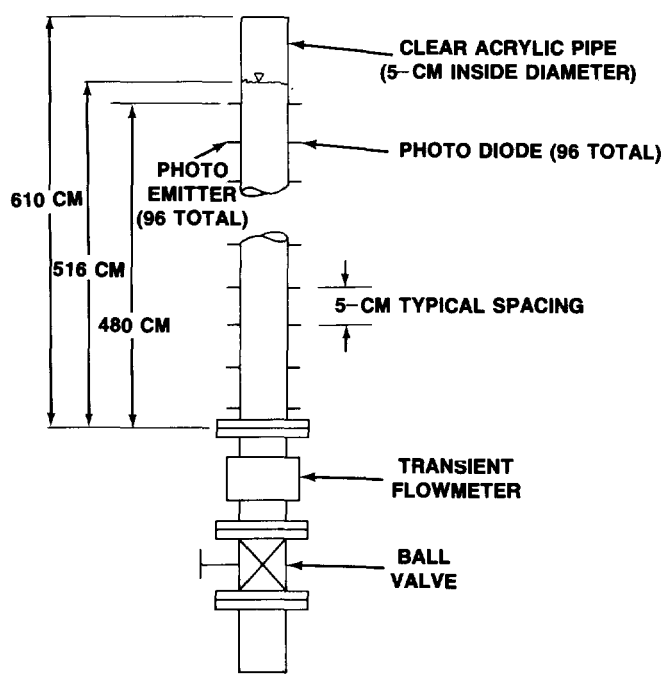

Fig. 2. Transient Flow Calibration Facility

An IBM personal computer with a Data Translations analog-to-digital data acquisition board was used to detect the trigger pulses by sampling the analog output of the electronics at a rate of 5000 Hz. At that rate, the time that the water surface passed each of the optical sensor pairs was known to within ±0.0002 second.

The effective distance between optical sensor pairs was established by draining the water at a very slow rate and weighing the amount of water collected between trigger pulses. The weight was converted into an effective distance between optical sensor pairs based on a constant 5-cm internal pipe diameter, as shown in Eq. (2)

$$L = W/(A\rho), \qquad (2)$$

where ρ is the weight density of the water, A is the cross-sectional area based on a 5-cm diameter, and W is the weight of the water between optical sensor pairs. This method accounted for variations in vertical distance between optical sensor pairs and also variations in diameter along the pipe.

Following each calibration run, post-processing software scanned the raw data file and created a file of the time at which each optical sensor pair was triggered. Velocity, based on a 5-cm diameter, was subsequently calculated from the time and effective distance values between optical pairs.

During a calibration, the analog output from the transient flowmeter was sampled simultaneously with the facility electronics at the 5000-Hz sampling rate. Since the output of the flowmeter was updated at a rate of 60 Hz, post-processing software scanned the raw data file and established the time corresponding to the updated flowmeter output to within ±0.0002 second. For each of these update times, the corresponding calibration velocity was calculated from the calibration velocity versus time data file by linearly interpolating between adjacent points. A comparison of the calibration velocity and the flowmeter velocity was then made.

RESULTS

Prior to conducting any of the transient calibrations, a steady-state calibration of the meter was conducted at the Alden Research Laboratory's Flowmeter Calibration Facility, Holden, MA. This calibration was performed by using the gravimetric method and is considered accurate to ±0.25%. The calibration was conducted over a velocity range of 0.15 to 9.1 m/sec in the 5-cm diameter flowmeter. The corresponding Reynolds number range was 7100 to 375,000.

The steady-state calibration curve is shown in Fig. 3. The curve is presented as percent error from actual velocity when flowmeter velocity is calculated with a constant meter factor (K). As shown, accuracy (linearity) was within ±1.7% over the complete flow range and within ±0.5% over the 40,000 to 375,000 Reynolds number range, which is a substantial portion of the total range.

Twelve transient calibration runs were conducted. Even though each run was initiated by manually opening the valve at the bottom of the facility, the velocity versus time curve was fairly consistent between runs.

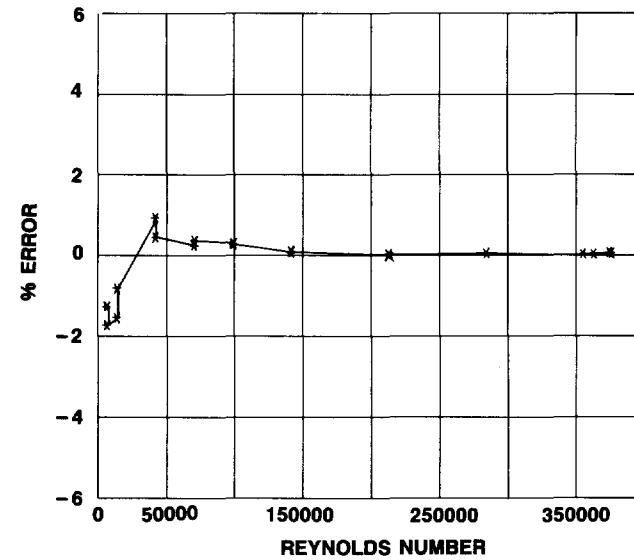

Fig. 3. Steady-State Calibration Curve

Results for a representative run are shown in the flow rate versus time curve of Fig. 4. The run lasted approximately 1 second. From 0.0 to approximately 0.4 second, the flow experienced an almost constant acceleration of approximately 1 g, reaching a velocity of 5 m/sec. Beyond 0.4 second, the free surface of the water column experienced considerable instability precluding any accurate measurements. The flowmeter, however, appears to have followed the water column velocity throughout the transient. All further discussions are limited to the 0.0-second to 0.4-second range of each run, which corresponds to the first 24 data points from the flowmeter.

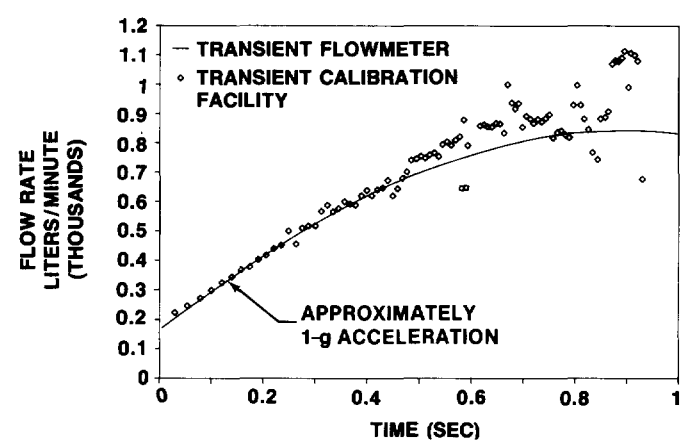

Fig. 4. Typical Transient Calibration Curve

Results for all 12 of the calibration runs are presented in table 1. Mean error between the calibration facility and flowmeter measured flow rates and standard deviation are presented separately for each run and also for the total of all data points. As shown, the absolute value of the mean error ranged from 0.946 to 1.370, while the standard deviation ranged from 1.78 to 3.33. The mean error for all the data points was -0.041 with a standard deviation of 2.57. Using the results from the total of all data points, the expected difference (±2σ or 95% level) between facility flowmeter measurements is ±5.2%.

(±2σ or 95% level) between facility flowmeter measurements is ±5.2%.

Table 1. Calibration Summary

Run Number	Mean Error (%)	σ
1	1.370	2.55
2	-0.946	2.56
3	-0.740	2.54
4	0.276	2.67
5	-0.575	2.47
6	0.776	2.62
7	-0.536	1.78
8	0.378	2.88
9	0.352	1.88
10	0.807	3.33
11	-1.318	2.36
12	-1.191	2.88
Average for all runs:	-0.041	2.57

Inspection of the transient calibration curves (similar to Fig. 4) for each run showed that the flowmeter output exhibited a smooth transition throughout the transient; however, the measured values from the facility fluctuated about the flowmeter curve within approximately ±5%. It is believed that the accuracy of the facility is approximately ±5%, while the flowmeter accuracy during a transient run is approximately equal to the steady-state accuracy stated previously.

CONCLUSIONS

An electromagnetic flowmeter has been developed that can accurately measure transient flow rates up to at least 1-g acceleration (maximum tested) with a frequency response to 60 Hz. A calibration facility using a free-falling column of water has been shown to be a viable means of evaluating transient flowmeter performance up to 1 g.

ACKNOWLEDGMENT

Support for this project was provided through the Independent Research Program at the Naval Underwater Systems Center, Newport, RI.

REFERENCES

1. J.S. Arnold, "An Electromagnetic Flowmeter for Transient Flow Studies," The Review of Scientific Instruments, vol. 22, no. 1, January 1950.

2. L.R. Iwanicki and R.J. Fontaine, "Application of an Electromagnetic Flowmeter in Unsteady Flow," ASME Symposium on Measurement in Unsteady Flow, May 1962.

3. J.A. Shercliff, The Theory of Electromagnetic Flow Measurement, Cambridge University Press, Cambridge, England, 1961.

4. I. Reinhold, "Velocity Profile Influence on Electromagnetic Flowmeter Accuracy," in Flow Measurement of Fluids, North-Holland Publishing Co., 1978.