DESIGN, CONSTRUCTION, AND EVALUATION OF A HYDRAULIC POWERED PTO WINCH

By

Joey McKee

BioResource and Agricultural Engineering

BioResource and Agricultural Engineering Department

California Polytechnic State University

San Luis Obispo

2011

TITLE	:	Design, Construction, and Evaluation of a Hydraulic Powered PTO Winch
AUTHOR	:	Joey McKee
DATE SUBMITTED	:	March 13, 2011

Senior Project Advisor	Signature
	Date
Department Head	Signature
	Date

ACKNOWLEDGEMENTS

First, I would like to thank my advisor, Dr. Mark A. Zohns who provided extensive hydraulic expertise in many times of need.

Second, I would like to thank my parents, Bill and Gina McKee, who provided the support and infrastructure for all of my projects over the years including this one.

Third, I would like to thank Ian Rutherford, who's helping hand in the shop made this project possible.

ABSTRACT

This senior project discusses the design, construction, and evaluation of a Hydraulic Powered PTO Winch installed on a 1952 Dodge M37 cargo truck. This system replaces the factory mechanical drive system with a complete hydraulic system capable of producing the original line pull. They hydraulic system consists of a pump, reservoir, motor, valve, and supporting hardware.

Field tests have concluded that with proper engine rpm a line pull equal to the factory configuration is possible utilizing strictly hydraulic power.

DISCLAIMER STATEMENT

The university makes it clear that the information forwarded herewith is a project resulting from a class assignment and has been graded and accepted only as a fulfillment of a course requirement. Acceptance by the university does not imply technical accuracy or reliability. Any use of the information in this report is made by the user(s) at his/her own risk, which may include catastrophic failure of the device or infringement of patent or copyright laws.

Therefore, the recipient and/or user of the information contained in this report agrees to indemnify, defend, and save harmless the state its officers, agents and employees from any and all claims and losses accruing or resulting to any person, firm or corporation who may be injured or damaged as a result of the use of this report.

TABLE OF CONTENTS

SIGNATURE PAGE ii
ACKNOWLEDGEMENTS iii
ABSTRACT iv
DISCLAIMER STATEMENT v
TABLE OF CONTENTS vi
LIST OF FIGURES vii
INTRODUCTION 1
LITERATURE REVIEW 2
PROCEDURES AND METHODS 3
RESULTS 8
DISCUSSION 9
RECOMMENDATIONS 11
REFERENCES 12
APPENDICES
Appendix A: How Project Meets Requirements for the BRAE Major……..…13
Appendix B: Design Calculations……..……16
Appendix C: Construction Drawings……...……..18

LIST OF FIGURES

1-BRADEN LU4 PTO WINCH 1
2-NV4500 2
3-STOCK M37 2
4-MOTOR SPECIFICATIONS 3
5-HYDRAULIC MOTOR 4
6-DRUM BRAKE 5
7-WINCH BOTTOM VIEW 5
8-HYDRAULIC RESERVOIR UNDER CONSTRUCTION 6
9-SIGHT GAUGE AND TANK COATING 6
10-FILTER AND CHECK VALVE 7
11-WIRELESS WINCH CONTROL 8
12-FACTORY CONFIGURATION 19
13-MODIFIED CONFIGURATION 20
14-HYDRAULIC SCHEMATIC 21

INTRODUCTION

A winch mounted on a piece of machinery has many advantages and uses in both recreation and productivity. Winches can be utilized to pull objects with a force far greater than drive wheels can provide in most circumstances. Winches also allow for controlled movement of objects without the need for displacement of the machine itself. The M37 cargo truck produced by the United States Military featured a factory option power take off or PTO winch. This winch which is rated at 7500 lbs. receives its input power via a driveshaft connected to the transmission power takeoff gearbox capable of bi-directional operation (Figure 1). In its factory configuration the winch functions properly but leaves little room for aftermarket modifications to the vehicle. For this design a six cylinder diesel engine takes the place of the stock 230 flathead engine to yield better all-around power and drivability. The Cummins diesel used for this application is compatible with many different transmissions but the most commonly used is the New Venture 4500 5 speed.

The New Venture 4500 five speed transmissions were commonly used in ¾ and 1 ton pickups along with some heavy duty special purpose cab and chassis vehicles. Power take off units are available for the NV4500 transmission but are limited to single direction use at a very high purchase price. Some of the special purpose cab and chassis vehicles used with the NV4500 were configured as Tow/recovery trucks equipped with many hydraulic devices. These devices were powered via a hydraulic pump mated to the side of the NV4500 transmission. This PTO/pump configuration is ideal for modification to the M37 cargo truck equipped with the Cummins diesel and the NV4500 Transmission.

With properly sized lines, reservoir and hydraulic motor in place the winch will be driven with a hydraulic system rather than a direct mechanical link to the transmission. When the winch is operated the PTO hydraulic pump will be engaged providing hydraulic pressure controlled by a 4 way valve delivering flow to a hydraulic motor. The hydraulic motor will turn a small driveshaft directly coupled to the back of the factory winch. This configuration will allow for hoses to be routed to the hydraulic motor rather than a long driveshaft which would normally not clear the aftermarket engine/transmission configurations.

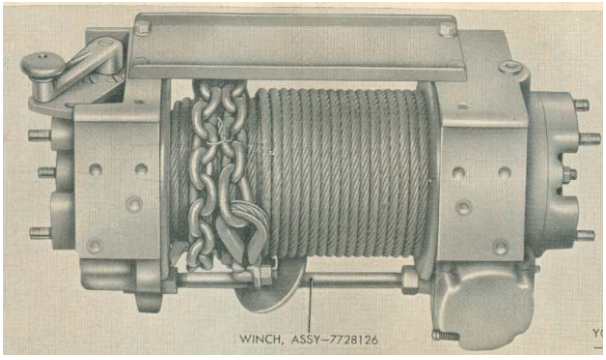

Figure 1. Braden LU4 PTO Winch (from Army, 1953)

LITERATURE REVIEW

A search was conducted to determine if any hydraulic systems were currently powering a Braden Winch configured on a M37 chassis (Figure 3). It was determined that under the current searching methods, a hydraulic powered PTO winch has not been implemented on the M37 chassis. Hydraulic winches are readily available, but are sold solely as a winch and motor configuration only designed to be installed on a tow truck or other industrial vehicle already outfitted with auxiliary hydraulics. Most recreational/industrial configurations utilize electric winches for recovery purposes but are limited in line pull due to heat buildup in the electric motor. Hydraulic power was found to be the most economical method of powering the factory Braden winch in this configuration.

Fluid power began in 1648 when Frenchman Blaise Pascal determined pressure in a fluid is transmitted equally in all directions. Fluid power is one of the three ways of transmitting power along with electricity and mechanical methods (Akers et al 2006). Before the universal adoption of electricity, hydraulic power was a sizeable competitor to other energy sources (Rabie 2009). Electricity is not an option in this configuration due to the lack of a source on the truck capable of providing ample voltage and current to run the winch. Mechanical power is not possible due to clearance issues between the transmission and the winch along with the cost and availability of a reversible PTO unit for the upgraded NV4500 Transmission (Figure 2). Utilizing fluid power provides large forces and low speeds, instant reversibility, and remote control.

Figure 2. NV4500 (from Guarino, 2005)

Figure 3. Stock M37 (from Army, 1955)

PROCEDURES AND METHODS

Design Procedure

Pump And Motor Sizing.

The pump and gear housing were purchased off of a medium duty tow truck which powered multiple hydraulic cylinders and motors. The PTO hydraulic pump driven off the NV4500 transmission in this system is rated at 14 GPM @ 1000 engine rpm and will produce 2500-3000 psi under load. These outputs are adequate to supply the hydraulic motor required correct system components are installed and minimal restrictions are in place (lines, valve, etc.). Because this pump and PTO gear housing are specific to the NV4500 Transmission they will serve as the base line for hydraulic system design. These parameters cannot be changed without severe financial consequences.

The hydraulic motor chosen for this application must be capable of bidirectional operation to allow for powered rotation of the winch drum both in and out. The hydraulic motor must be chosen so that it is as close to the design parameters as possible. For this system the motor will be chosen based on its output torque and the speed resulting from its flow rate will have to suffice. The calculations found in Appendix B require motor parameters of 100 ft-lbs and 1100 rpm which are closely resembled by the hydraulic motor described in Figure 4.

Motor Chosen:

4.5 cu in CHAR-LYNN 101-2116 HYD MOTOR

SPECIFICATIONS

- **Disp.** 4.5 cu. in. / rev.
- **Motor Type** Gerotor
- **Pressure:**
  1800 PSI cont.
  2400 PSI int.
- **Torque:**
  1044 in-lbs. cont.
  1401 in-lbs. int.
- **Speed:**
  760 RPM cont.
  904 RPM int.
- **Flow:**
  15 GPM cont.
  18 GPM int.
- **Rotation** Reversible
- **Mount** 4 bolt Square, 3.25" B.C.
- **Shaft** 1" dia. x 1-1/2" keyed
- **Ports** SAE 10
- **Case Drain** SAE 4
- **Size** 5-3/8" x 3-5/16" x 3-5/16"
- **Shpg.** 13 lbs.

Figure 4. Motor Specifications (from Surplus Center 2010)

The Char-Lynn 4.5 cu. In./rev. hydraulic motor (Figure 5.) will provide approximately 1000 inch lbs. of torque to the input of the winch continuously and up to 1400 inch lbs. intermittently during spikes in pulling power and engine rpm. These torque specifications will only be provided if the proper pressure is provided to the hydraulic motor therefore a properly adjusted pressure relief will have to be installed to ensure the correct pressure at the motor. This hydraulic motor will also provide 760 rpm continuously and 900 rpm intermittently which is less than the desired 1000 rpm. This shortcoming is tolerable due to the conservative 2000 rpm assumed engine speed in the stock configuration. The Char-Lynn motor chosen will provide 760 rpm at the input of the winch gearbox which is lower than stock but acceptable for the duty cycle of the system.

Figure 5. Hydraulic Motor (from Surplus center, 2010)

Special Design Considerations.

In most hydraulic powered winch applications special consideration must be taken for an overrunning condition. This occurs when a load on the winch is trying to reel out the spool and the hydraulic motor acts like a pump moving fluid in the system backwards out of control. This condition is generally avoided with the use of a pilot operated check valve. An overrunning condition is not a concern in this system due to a built in brake on the factory winch (Figure 6). A small brake band is located inside the winch (figure 7) which locks the drum from rotating when the input shaft is not being rotated.

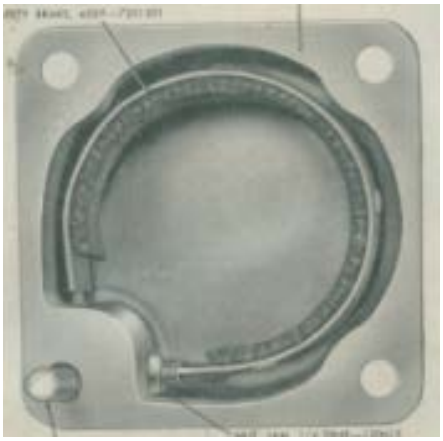

Figure 6. Drum Brake (from Army, 1955)

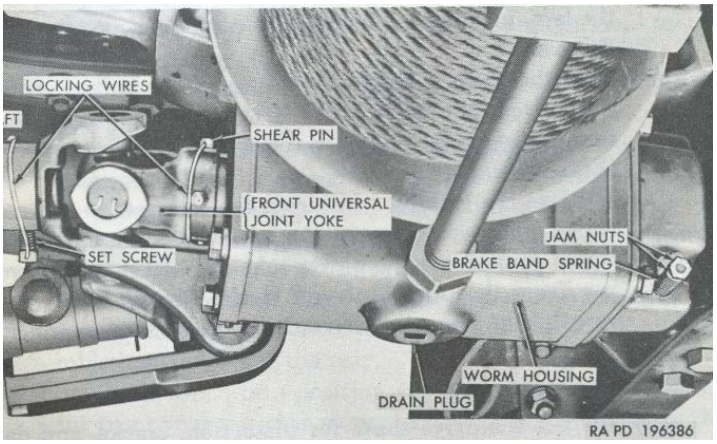

Figure 7. Winch Bottom View (from Army, 1953)

Hydraulic Circuit Design.

The circuit used for this hydraulic system is relatively simple and allows for future modification as needed. The initial design incorporated a simple 4 way manual valve activated by pushing a lever either way to control winch direction. This worked fine but limited the options for valve location and remote control. Utilizing a piloted operated solenoid control valve to change direction in the system requires a case drain at the valve and a check valve on the return side shown in Appendix C. This check valve provides 100-200 psi of back pressure allowing the pilot operated solenoid control valve to function properly. This solenoid controlled valve allows for remote location of the valve in accordance with the operator and keeps high pressure lines in a safe location. This system also supports remote control of the winch via wireless controllers.

Construction Procedure

Reservoir Construction.

The reservoir for this hydraulic system is constructed out of 16 gauge steel with weld in tank flanges for the working ports (figure 8). The design includes a removable top plate to access the inside of the reservoir in the event of contamination. The inside of the tank is coated with fuel tank sealant to prevent any corrosion or leakage in the future. The return fitting enters high on the reservoir but utilizes a diversion fitting to ensure the fluid returns below the fluid level to eliminate any air entrainment. For the low duty cycle of this system its capacity of 8 gallons will suffice to keep heat minimal in the fluid. The reservoir will be located underneath the passenger seat approximately 1 foot above the pump inlet. A sight gauge was constructed on the side of the reservoir for accurate fluid level indication along with a porous breather on top to eliminate pressure build up (figure 9). Utilizing half inch hydraulic hose (-8) for the working lines and the pressure lines has been found to be the most economical path. While line velocities at 14 GPM exceed 15 Fps, it is simply not economical or physically possible to fit -12 lines with the current body/frame configuration of the vehicle.

For the initial system testing hot dipped galvanized fittings were to be utilized due to the low cost and availability. It is not good practice to use these fittings due to the possibility of the galvanizing compounding chipping off and contaminating the fluid circulation. These fittings were removed when it was determined that all lines and component locations were correct. High pressure hydraulic fittings were installed in their place.

Figure 8. Hydraulic Reservoir under construction

Figure 9. Sight gauge and tank coating

Control Valve, Filter, And Check Valve Installation.

The method chosen fluid control for this circuit is a pilot operated solenoid controlled valve mounted to a sub plate. The sub plate incorporates a built in pressure relief valve which can be adjusted from 1500-3000 psi. This valve utilizes 12 volt solenoids to shift a small spool located on the very top of the valve. This small spool controls a small amount of pilot pressurized fluid which in turn shifts a larger spool controlling the main flow of hydraulic fluid. In order to provide adequate pilot pressure to make this valve function correctly a check valve is installed on the return side of the circuit (Figure 10). This check valve produces back pressure (100-200 psi) to allow the pilot function in the valve to function. A spin on style hydraulic filter is placed after the check valve before the reservoir to remove any contaminants from the system.

Figure 10. Filter and Check Valve

Test Procedure.

Upon filling the system with hydraulic oil and checking for leaks the system was tested for function in both directions. The system was cycled to allow for any air trapped in the lines to escape through the reservoir procedure. After checking unloaded system pressures the winch cable was spooled up and prepared for operation.

RESULTS

The hydraulic system performs well under various conditions. The reservoir provides enough fluid and keeps the system primed at angles over 45 degrees. The pilot operated solenoid control valve requires a slight increase in engine rpm to provide more flow across the check valve which in turn produces adequate pilot pressure on the return line. The pilot operated solenoid control valve also allows for remote control operation of the winch outside the vehicle. This is achieved through the use of a 12 volt wireless remote and receiver integrated into the valve switching circuit (Figure 11). When unloaded the winch has a tendency to “creep” as the valve is not fully returning to center. This is not a problem when the winch is loaded as the small amount of fluid causing the hydraulic motor to creep does not produce a large amount of line pull. The winch line pull was tested by fixing the cable to a ground anchor and inserting a load cell in line between the anchor and the winch cable. The system was capable of producing 6100 lbs. of line pull on the first spool of cable. This force was produced at approximately 2300-2500 psi. The 6100 lb line pull was achieved with full cable wrap leaving the winch the least mechanical advantage. With unavoidable hydraulic losses in the system it was not capable of the target 7500 lb line pull. With more cable spooled out in future pulling situations, the winch will be capable of producing the 7500 lb target line pull.

Figure 11. Wireless winch control

DISCUSSION

The largest problem with outfitting a vehicle with a hydraulic system is acquiring enough room to fit the various components while retaining functionality and ease of maintenance. Many hydraulic lines were carefully routed to avoid sharp edges and moving drivetrain components. The actual construction of the various lines became more difficult especially involving lines with 90 degree fittings crimped on the ends. Ninety Degree fittings require that the line be pre fitted in order to obtain the correct rotation of the fitting when the opposite end is tightened.

The accuracy of the results was determined by comparison of the stock line pull with the modified hydraulic winch line pull. The hydraulic system exhibited no signs of stress when undergoing a line pull of 6100 lbs. in the worst case pulling on the first spool of cable. A pressure gauge installed showed a constant pressure under load of approximately 2300-2500 psi.

This system underwent many different stages of construction and modification within the last year. The original system consisting of a manual control valve worked properly but did not provide adequate relief valve strength for large line pulls. This manual control valve was installed for initial testing before upgrading to the pilot operated solenoid control valve. The relief valve in the manual control valve was simply too weak to hold the proper pressure needed to produce proper line pull. The pilot operated solenoid control valve is designed to handle larger flows (up to 50 GPM) and provides much smoother and quieter operation of the winch.

Proper safety precautions were taken in the design of this system to ensure all components were operating well under their operating limits. All hydraulic lines and fittings installed are capable of handling in excess of twice the pressure relief setting. The pressure relief valve ensures the system does not see any spikes in pressure beyond 2500 psi. Extra precautions must be taken when operating any winch in the field to ensure hands and other body parts are not caught in the winch drum. The winch line under tension can be dangerous and safety must be kept in mind at all times considering the danger of the cable breaking and causing bodily injury.

The cost of this system cannot be directly compared to an electric winch or off the shelf hydraulic winch because there is no application that will directly bolt onto the M37 chassis. Electric winches with a similar line pull generally cost $1000. Electric winches are easier to install but carry a very small duty cycle and are prone to overheating under heavy line pull situations. Electric winches are substantially lighter than the hydraulic powered PTO winch but in the case of the M37 chassis weight is not a deciding factor. Off the shelf hydraulic winches generally cost $1000 but require the same pump, valve, reservoir and other supporting systems as

used in the hydraulic powered PTO winch. These other winch options could only be mounted to the M37 chassis with extensive bumper modifications. The Bumper mounting brackets of the M37 chassis were designed to accept the Braden LU4 and the extra time and cost would have to be factored into mounting an electric winch or other hydraulic winch.

RECOMMENDATIONS

The scope of this project was kept small from the beginning with one main goal in mind. The goal of achieving stock winch function with an aftermarket engine and transmission was achieved while extensive knowledge and experience were gained along the project path. Future projects of this manner would be recommended to source a smaller hydraulic pump capable of producing lower flows. The size of the hydraulic pump in this project is larger than necessary to run the one hydraulic motor but leaves room for other systems in the future. A high idle solenoid should be installed on the throttle linkage of the engine to allow for sustained use of the pilot operated solenoid control valve.

REFERENCES

Akers, Arthur and Grassman, Max and Smith, Richard. 2006. Hydraulic Power System Analysis. Ames, Iowa: Taylor & Francis.

Department of the Army. 1953. Power Train Body and Frame for 3/4-Ton 4x4 Cargo Truck M37 (TM 9-8031-2). Washington D.C. US Government.

Department of the Army. 1955. Operation and Organizational Maintenance for 3/4-Ton 4x4 Cargo Truck M37 (TM 9-8030). Washington D.C. US Government.

Guarino, Dan. 2005. NV4500 Transmission Service Technical Manual. Roberts, Montana, 4x4 Tech, Incorporated.

Rabie, M. 2009 Fluid Power Engineering. Chicago, Illinois, McGraw hill companies.

Surplus Center. 2010. Hydraulics. Surplus Center Website. Lincoln, Nebraska. Available at: www.Surpluscenter.com. Accessed 29 November 2010.

APPENDIX A

HOW PROJECT MEETS REQUIREMENTS FOR THE BRAE MAJOR

HOW PROJECT MEETS REQUIREMENTS FOR THE BRAE MAJOR

Major Design Experience

The BRAE senior project must incorporate a major design experience. Design is the process of devising a system, component, or process to meet specific needs. The design process typically includes the following fundamental elements. This project addresses these issues as follows:

Establishment of Objectives and Criteria. The objectives of this project are to design and construct a hydraulic system capable of providing power to the factory winch on the M37 chassis. This will involve the correct sizing of pump, motor, valve, and all other components in the system.

Synthesis and Analysis. The process will involve AutoCAD drawings of the circuit, hydraulic system analysis, and general construction and fabrication processes.

Construction, Testing, and Evaluation. This project will include construction of the hydraulic system, extensive testing and field evaluations for line pull and line speed under various loading conditions.

Incorporation of Applicable Engineering Standards. This project will be designed to meet the standards set by the American National Standards Institute/Hydraulics Institute (ANSI-HI).

Capstone Design Experience

The BRAE senior project is an engineering design project based on the knowledge and skills acquired in earlier coursework (Major, Support, and/or GE courses). This project incorporates knowledge and skills from these key courses:

- BRAE 129
- BRAE 234
- BRAE 151
- BRAE 421
- BRAE 422

Design Parameters and Constraints

This project addresses a significant number of the categories of constraints listed below.

Physical. The hydraulic winch system must fit within the constraints of the M37 chassis while allowing for easy maintenance and proper function.

Economic. The overall goal of the project is powering the stock Braden LU4 winch with a hydraulic system that keeps the cost in mind of the recreational off road enthusiast.

Environmental. N/A

Sustainability. N/A

Manufacturability. This project could be modified to fit other chassis utilizing the same core components of the hydraulic system.

Health and Safety. Hydraulic lines are Parker 381 series Type AT - ISO 1436 Type 2AT EN 853 Type 2SN. This hose has a maximum pressure rating of 5000 psi. System relief is valve set at 2500 psi and drive shaft shear pin is in place to prevent pressure spikes in excess of 2500 psi.

Ethical. **Social.** N/A.

Political. N/A

Aesthetic. Attaining the factory appearance from the outside of the chassis is important.

Other. N/A

APPENDIX B

DESIGN CALCULATIONS

DESIGN CALCULATIONS

Calculations to determine size of hydraulic motor

Required hydraulic motor torque calculations:

Hardest Pull

$$Torque\ on\ Drum = (4.5"drum\ radius) * (\frac{1ft}{12in}) * (7500\ Lb\ Line\ Tension) = 2812.5\ ft\ lbs$$

$$Required\ winch\ input\ torque(2812.5\ ft\ lbs\ Drum\ Torque) * \left(\frac{1}{29} Gear\ Reduction\right) = \mathbf{97\ ft\ lbs}$$

Easiest Pull

$$Torque\ on\ Drum = (2.5"drum\ radius) * (\frac{1ft}{12in}) * (7500\ Lb\ Line\ Tension) = 1562.5\ ft\ lbs$$

$$Required\ winch\ input\ torque(1562.5\ ft\ lbs\ Drum\ Torque) * \left(\frac{1}{29} Gear\ Reduction\right) = \mathbf{54\ ft\ lbs}$$

Required hydraulic motor speed calculations

$Analysis\ of\ factory\ PTO\ drive\ system\ at\ assumed\ 2000\ engine\ rpm$

$$\left(2000\ Engine\ \frac{Rev}{Min}\right) * \left(\frac{1}{1.75} PTO\ reduction\right) = \mathbf{1100\ required\ winch\ input\ rpm}$$

$Therefore\ a\ hydraulic\ motor\ capable\ of\ providing\ 1100rpm\ and\ 100\ ft\ lbs\ of\ torqe\ is\ required$

APPENDIX C

CONSTRUCTION DRAWINGS

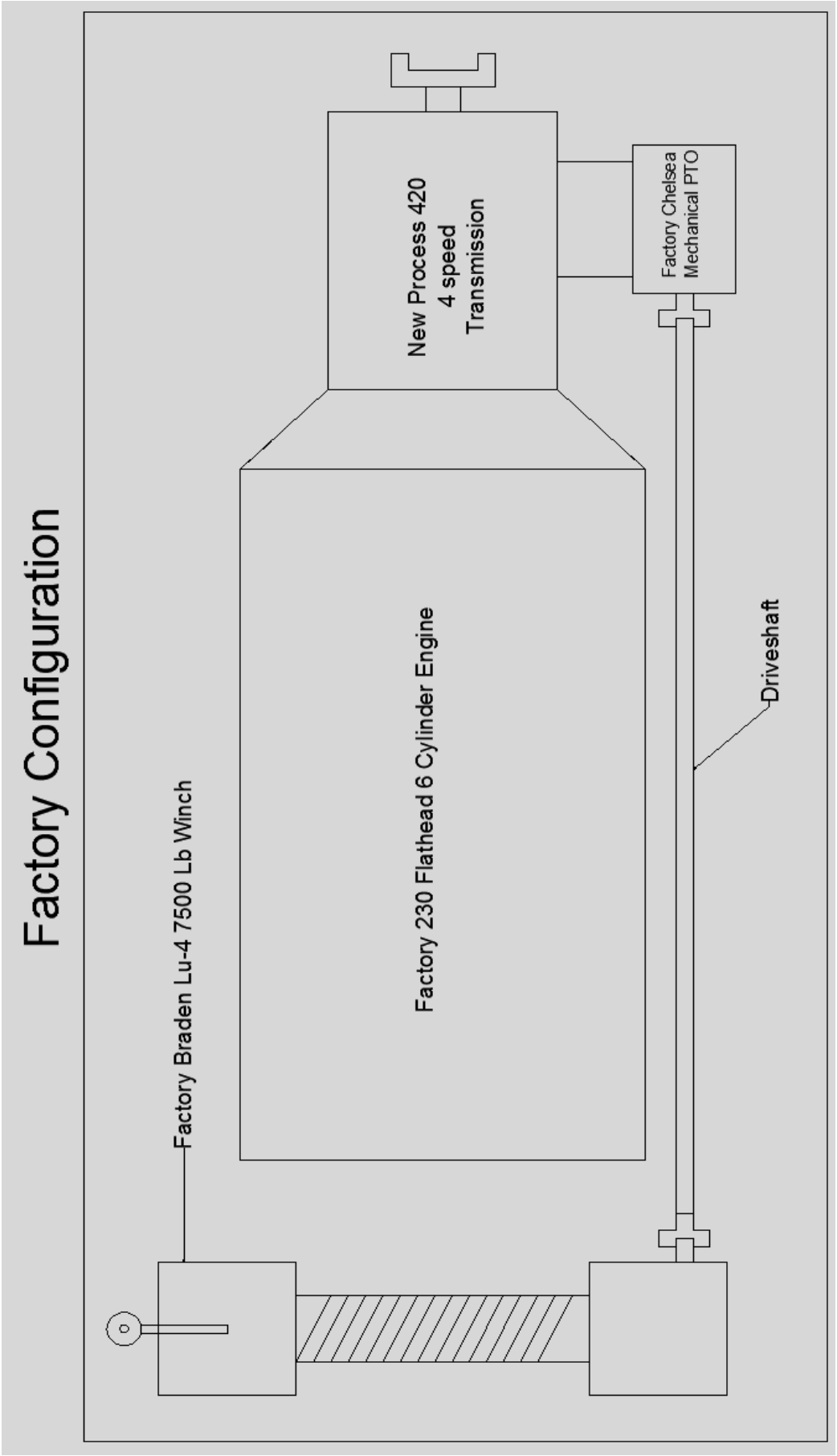

Figure 12. Factory Configuration

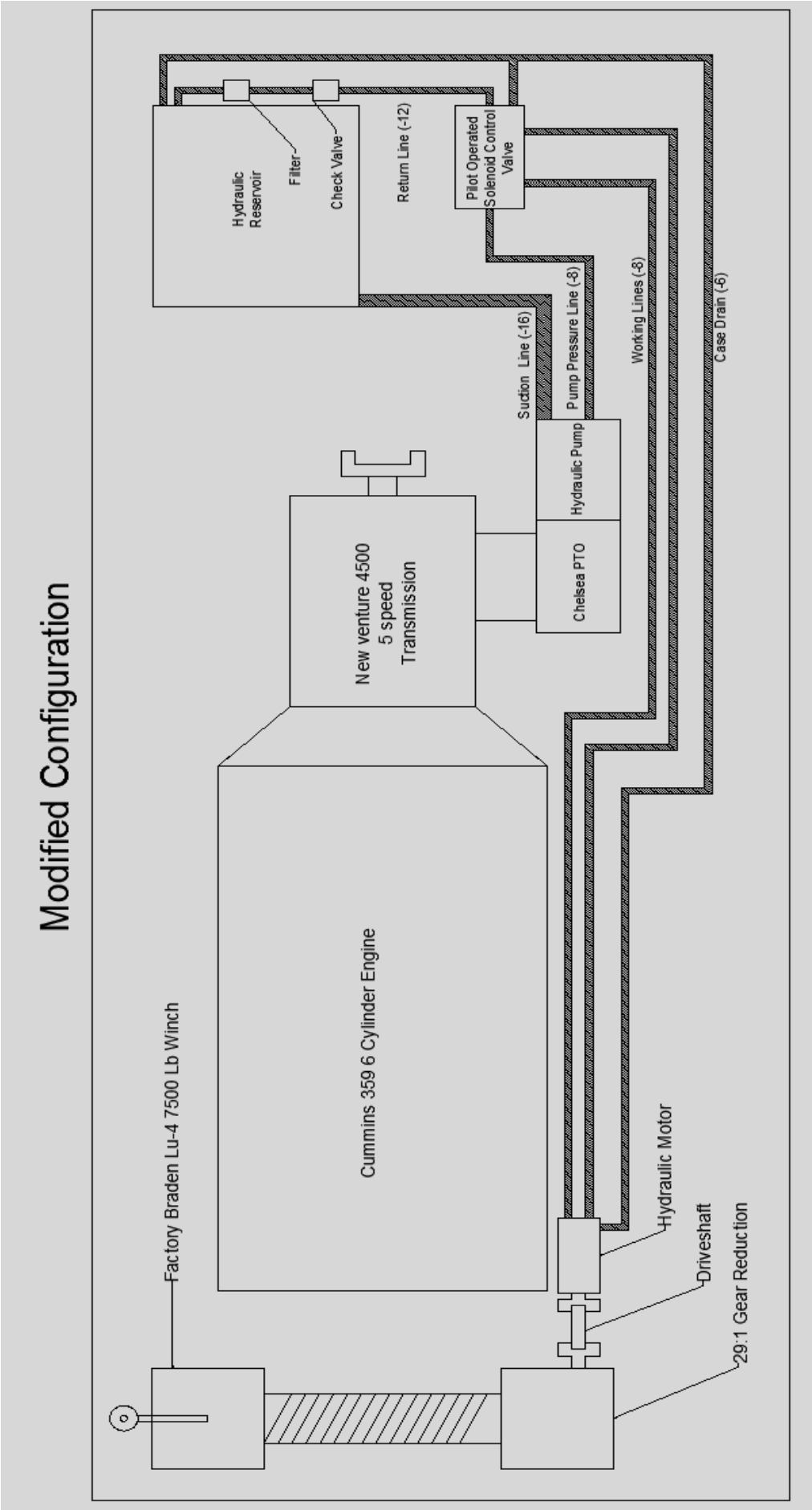

Figure 13. Modified Configuration

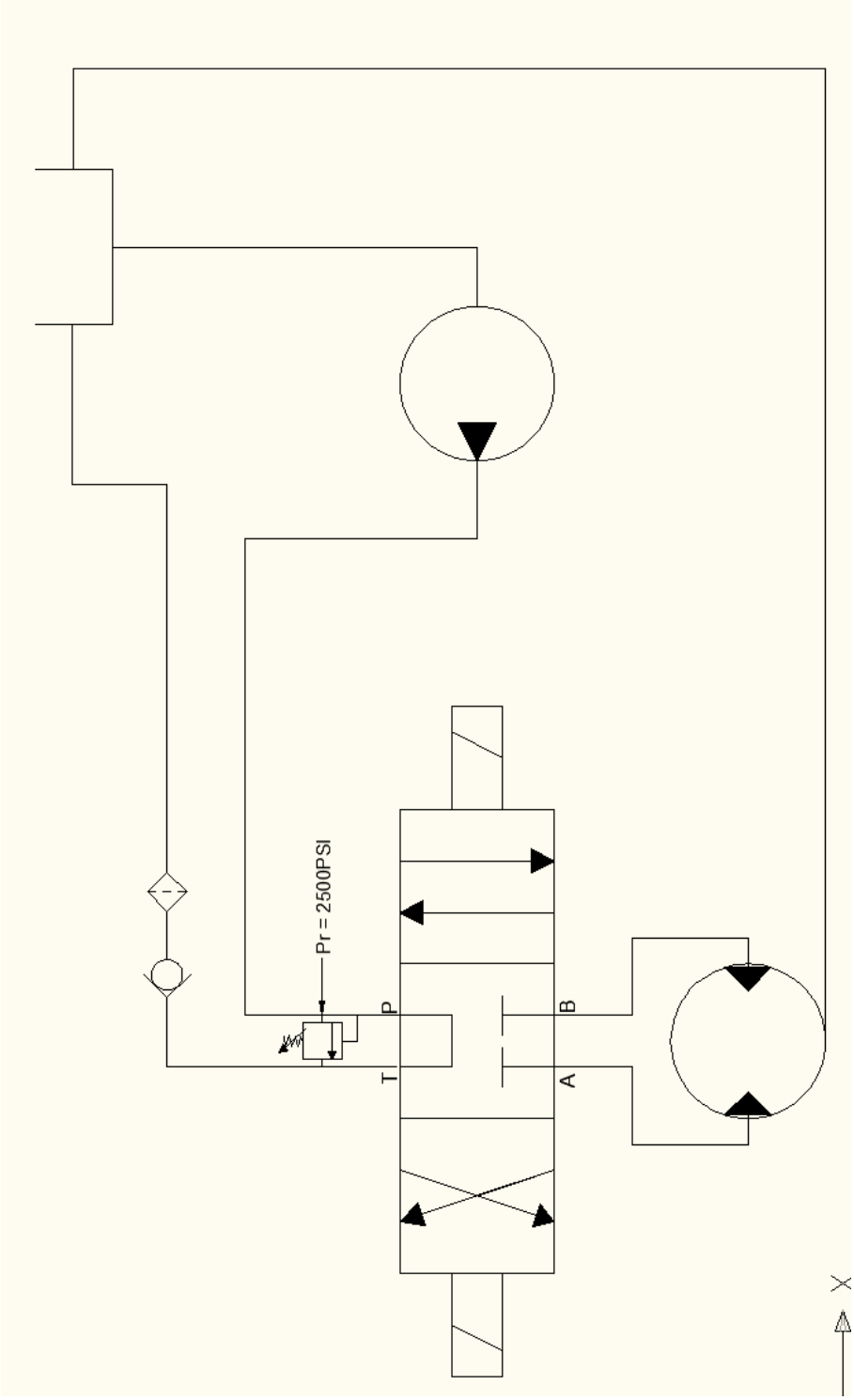

Figure 14. Hydraulic Schematic